# Model: 214D-1

## Batch Controller

# USER'S MANUAL


**HP-289**
**November 2002**

HOFFER Flow Controls
Perfecting Measurement™

107 Kitty Hawk Lane • P.O. Box 2145 • Elizabeth City, NC 27909
1-800-628-4584 • (252) 331-1997 • Fax (252) 331-2886
www.hofferflow.com email: info@hofferflow.com

# NOTICE

HOFFER FLOW CONTROLS, INC. MAKES NO WARRANTY OF ANY KIND WITH REGARD TO THIS MATERIAL, INCLUDING, BUT NOT LIMITED TO, THE IMPLIED WARRANTIES OF MERCHANTABILITY AND FITNESS FOR A PARTICULAR PURPOSE.

This manual has been provided as an aid in installing, connecting, calibrating, operating, and servicing this unit. Every precaution for accuracy has been taken in the preparation of this manual; however, HOFFER FLOW CONTROLS, INC. neither assumes responsibility for any omissions or errors that may appear nor assumes liability for any damages that result from the use of the products in accordance with information contained in the manual.

HOFFER FLOW CONTROLS' policy is to provide a user manual for each item supplied. Therefore, all applicable user manuals should be examined before attempting to install or otherwise connect a number of related subsystems.

During installation, care must be taken to select the correct interconnecting wiring drawing. The choice of an incorrect connection drawing may result in damage to the system and/or one of the components.

Please review the complete model number of each item to be connected and locate the appropriate manual(s) and/or drawing(s). Identify all model numbers exactly before making any connections. A number of options and accessories may be added to the main instrument which are not shown on the basic user wiring. Consult the appropriate option or accessory user manual before connecting it to the system. In many cases, a system wiring drawing is available and may be requested from HOFFER FLOW CONTROLS.



HOFFER FLOW CONTROLS’ policy is to make running changes, not model changes, whenever an improvement is possible. This affords our customers the latest in technology and engineering. The information contained in this document is subject to change without notice.

## WARRANTY

HOFFER FLOW CONTROLS, INC. warrants this unit to be free of defects in workmanship and materials provided that the unit was properly selected for the service intended, properly installed, and not misused. Equipment returned, transportation prepaid, within 12 months after delivery of goods or 18 months from date of shipment for units destination outside the United States and is found by HOFFER FLOW CONTROLS inspection to be defective in workmanship or materials will be repaired or replaced at HOFFER FLOW CONTROLS sole option, free of charge and returned prepaid using the lowest cost transportation.

## RETURN REQUESTS / INQUIRIES

Direct all warranty and repair requests/inquiries to the Hoffer Flow Controls Customer Service Department, telephone number (252) 331-1997 or 1-800-628-4584. BEFORE RETURNING ANY PRODUCT(S) TO HOFFER FLOW CONTROLS, PURCHASER MUST OBTAIN A RETURNED MATERIAL AUTHORIZATION (RMA) NUMBER FROM HOFFER FLOW CONTROLS' CUSTOMER SERVICE DEPARTMENT (IN ORDER TO AVOID PROCESSING DELAYS). The assigned RMA number should then be marked on the outside of the return package and on any correspondence.

FOR **WARRANTY** RETURNS, please have the following information available BEFORE contacting HOFFER FLOW CONTROLS:

1. P.O. number under which the product was PURCHASED,
2. Model and serial number of the product under warranty, and
3. Repair instructions and/or specific problems relative to the product.

FOR **NON-WARRANTY** REPAIRS OR **CALIBRATIONS**, consult HOFFER FLOW CONTROLS for current repair/calibration charges. Have the following information available BEFORE contacting HOFFER FLOW CONTROLS:

1. P.O. number to cover the COST of the repair/calibration,
2. Model and serial number of the product, and
3. Repair instructions and/or specific problems relative to the product.

# CONTENTS

# 1. Introduction

The Model 214D-1 Batch Controller accepts pulse or frequency flow signals and automatically controls the batching of fluids via a one or two stage control valve.

The instrument is extremely flexible and easy to operate, with a four key front panel operation that enables the batch quantity to be set and batches to be started or stopped.

This manual covers the Model 214D-1 which accepts most frequency and pulse signals, including mV outputs from turbine flowmeters, and 2 wire proximity switch outputs. It also allows all four front panel switches to be remotely connected via the rear panel terminal strip.

The instrument is fully configurable, with all calculation constants set via the front panel switches and stored permanently in a non-volatile memory.

This instrument conforms to the EMC-Directive of the Council of European Communities 89/336/EEC and the following standards:

| | |
|---|---|
| *Generic Emission Standard EN 50081-1* | Residential, Commercial & Light Industry Environment. |
| *Generic Emission Standard EN 50081-2* | Industrial Environment. |
| *Generic Immunity Standard EN 50082-1* | Residential, Commercial & Light Industry Environment. |
| *Generic Immunity Standard EN 50082-2* | Industrial Environment. |

In order to comply with these standards, the wiring instructions in Section 7 must be followed.

## 1.1 Model Number Designation

The Model number of an instrument describes which input and output options are installed and the AC voltage rating.

**MODEL 214D DIGITAL BATCH CONTROLLER**
**(TO BE USED ONLY WHEN APPROVALS ARE REQUIRED)**

MODEL **214D-( A )-( B )-( C )-( D )-( E )**

INPUTS
ANALOG & COMMUNICATIONS
POWER
MOUNTING (ENCLOSURES)
OPTIONS

**INPUTS**
MODEL **214D-( A )-( )-( )-( )-( )**
OPTION ( A )
(1) BASIC UNIT/SINGLE CHANNEL
(1H) BASIC UNIT/SINGLE CHANNEL/HIGH SPEED **(SEE NOTE 6)**
(LA) 4-20 MA TEMPERATURE
(LR) RTD, 4 WIRE LINEARIZED
(Q) QUADRATURE BI-DIRECTIONAL FLOW **(SEE NOTE 3)**

**ANALOG & COMMUNICATIONS**
MODEL **214D-( )-( B )-( )-( )-( )**
OPTION ( B )
(0) NO OPTIONS OTHER THAN SCALED OPEN COLLECTOR. STANDARD ALL OPTIONS.
(1) RS232/422/485

**POWER**
MODEL **214D-( )-( )-( C )-( )-( )**
OPTION ( C )
(A) 95-135 VAC 50/60 HZ AND 11.5-28.5 VDC SELECT
(C) 190-260 VAC 50/60 HZ

**MOUNTING (ENCLOSURES)**
MODEL **214D-( )-( )-( )-( D )-( )**
OPTION ( D )
(1) PANEL MOUNT (STD)
(2) NEMA 4X, WHITE FIBERGLASS
(2B) NEMA 4X, ALUMINUM WITH HEAVY DUTY EXTERNAL SWITCHES
(CEX) CENELEC FLAME-PROOF, CSA & SAA APPROVED Eexd11BT6
(EX) UL/CSA EXPLOSION-PROOF ENCLOSURE

**OPTIONS**

MODEL **214D-(__)-(__)-(__)-(__)-(E)**

OPTION (E)

| | |
|---|---|
| (H) | 50 W HEATER (SPECIFY 12 VDC, 115 VAC OR 220 VAC) |
| (B) | BACKLIGHTING DISPLAY |
| (C) | CONFORMAL COATING |
| (CE) | INTERFERENCE CE COMPLIANCE |
| (CEN) | CENELEC, CSA NRTL/C AND SAA APPROVAL |
| (NTEP) | WEIGHTS & MEASURES CUSTODY TRANSFER. **(AVAILABLE ON (LA) OR (LR) OPTIONS ONLY)** |
| (UL) | ELECTRICAL ETL (US) APPROVED TO UL508 & CSA |

NOTES:

1. LCD DISPLAY 6 DIGIT 0.7" (17.8MM) HIGH, NON-VOLATILE TO TEN YEARS.
2. TRANSDUCER SUPPLY 8-24 VDC @ 50 MA MAX., FIELD ADJUSTABLE.
3. 10 POINT LINEARIZATION WITH INPUT OPTIONS (LA), (LR) AND (Q). THE (Q)OPTION CAN BE CONFIGURED WITH EITHER THE (LA) OR (LR) OPTION. SINGLE POINT 'K' FACTOR WITH INPUT OPTIONS (1) AND (1H).
4. BOTH MAGNETIC COIL AND HALL EFFECT INPUTS ACCEPTED.

| | TEMPERATURE RANGE |
|---|---|
| 5. (LR) RTD INPUT | -148 TO +392 DEG. F. |
| (LA) 4-20 MA INPUT | |
| GENERAL LIQUIDS | -459 TO +392 DEG. F. |
| PETROLEUMS | -148 TO +392 DEG. F. |
| LPG | -49 TO +140 DEG. F. |

6. FOR BATCHES LESS THAN 15 SECONDS RESPONSE TIME IS LESS THAN 20MS WITH A SCALE FACTOR LIMITED TO 4000, ONE OR TWO STAGE SHUTDOWN.
7. CAN CONTROL SINGLE OR DUAL STAGE SHUTDOWN VALVE.
8. PROGRAMMABLE TO COUNT UP OR DOWN FOR BATCH SIZE.

This page intentionally left blank.

# 2. Specification

*General*

| | |
|---|---|
| Display: | 6 digit LCD. 0.7" (17.8mm) high digits |
| Display Update Rate: | 0.25 seconds |
| Transducer Supply: | 8-24VDC field adjustable, 50mA maximum |
| Power Requirements: | DC: 11.5 to 28.5 volts 130mA typical current (no options) |
| | AC: 95-135 VAC or 190-260 VAC (Set internally at factory) |
| Operating Temperature: | 0°C to 55°C standard |
| Dimensions: | 5.7" (144mm) wide x 2.8" (72mm) high x 7.0" (178mm) deep |
| Cutout**:** | 5.5" (139mm) wide x 2.6" (67mm) high |

*Frequency Input*

| | | |
|---|---|---|
| Frequency Range: | Minimum: | 0.25Hz on Rate<br>0Hz on Total |
| | Maximum: | 10KHz |
| Input Circuits: | See Section 6.1 | |
| Scaling Range: | 0.1000 to 50,000 | |

*Relay Outputs*

| | |
|---|---|
| Maximum Switching Power: | 1250VA |
| Maximum Switching Voltage: | 250VAC, 30VDC |
| Maximum Switching Current: | 5 Amps |

*4-20mA Output*

| | |
|---|---|
| Resolution: | 10 bits |
| Accuracy: | Better than 0.05% |
| Maximum Load: | 500 ohms internally powered, 950 ohms from 24VDC |
| Isolation: | Output is isolated |

*Pulse Output*

| | |
|---|---|
| Pulse Width: | 10msec (negative going pulse) |
| Maximum Duty Cycle: | 49 pulses per second |
| Output: | Open collector transistor will sink 100mA. |
| Scaling: | The pulse output is scaled and outputs one pulse each time the accumulated total increments. |

# 3. Operation

The Model 214D-1 uses a low power CMOS microprocessor to perform all control functions and calculations.

The instrument is fully configurable with all operating parameters and calculation constants user settable. (See Section 5 entitled "Configuration" for information on configuring.) All parameters and constants are stored in a non-volatile memory which retains data without battery backup for a minimum of 10 years.

A block diagram of the instrument is shown below.

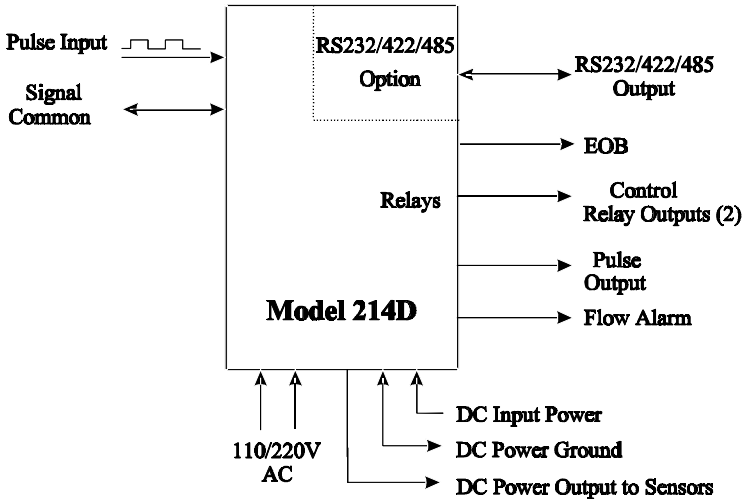

## 3.1 Front Panel Operation

The four key operation makes the operation of the Batch Controller very easy.

### 3.1.1 Setting the Batch Quantity

The batch quantity is set as follows:

| *Switch Action* | *Display* | *Comments* |
|---|---|---|
| Press BATCH SET | Batch | "Batch" is displayed for one second followed by the batch quantity last entered. The Batch Set LED lights. |
| | *"**1**"* 2345 | The most significant digit flashes indicating that it can be changed. |
| Press △ | *"**2**"* 2345 | Pressing the DISPLAY key will increment the digit. The up arrow on the DISPLAY key indicates to increment digit. |
| Press ▷ | 2 *"**2**"* 345 | Pressing the RUN key will change digit and enable the next digit to be incremented. The right arrow on the RUN key indicates to change digit. |
| Press BATCH SET | Set | Once the desired number is entered, press the BATCH SET key to return to the Run mode. The Batch Set LED will extinguish. |

Once set, the batch quantity will be retained in the non-volatile memory and will not alter until changed by the user.

The batch quantity can only be set while the instrument is in non-operational state such as when the batch is complete or if the batch process has been interrupted. However, the Batch key can be pressed while in the run state and the batch quantity displayed. All digits will flash to signal the quantity cannot be changed.

### 3.1.2 Starting a Batch

To start the process the RUN key is pressed. The Run LED will light and the instrument will begin to totalize from zero or, if programmed to count down, the display will decrement from the batch quantity.

The batcher has two control relays which are energized and de-energized as described in Section 3.2.

### 3.1.3 Stopping

The process can be stopped at any time by pressing the STOP key. Once the process has been interrupted in this way, it can be continued by pressing the RUN key or the process can be aborted and the instrument reset by pressing the STOP key a second time.

When the process is interrupted, the STOP LED will flash to prompt the operator to either restart or abort the batch.

### 3.1.4 Resetting

The instrument can be configured to reset in one of two ways.

- At the end of a batch, the STOP key must be pressed to reset the Batch Total. If the instrument is configured to count down, the Batch Total will then reset to the preset quantity. If it is configured to count up, the Batch Total will clear to zero.
- If Auto Reset is configured on, the Batch Total will automatically reset when the RUN key is pressed to start the next batch.

### 3.1.5 Displayed Information

The display will normally show the Batch Total which is the total count for the current batch and is reset on each new batch.

The DISPLAY key can be used to display the following additional information:

***Rate***

On the first press of the DISPLAY key, the display shows RATE for one second followed by the flowrate.

***Accumulated Total***

On the next press of the DISPLAY key, the display shows ACC for one second followed by the accumulated total. The Accumulated Total cannot be reset during normal operation.

### 3.1.6 Limit on Batch Size

To prevent accidental entry of large batch quantities, a maximum batch limit can be set during configuration. The operator is then prevented from entering a batch quantity which exceeds this predetermined value.

## 3.2 Batch Operations

The Batch Control functions can be configured to operate in one of two ways.

1. At the end of the batch, the STOP key must be pressed to reset the Batch Total. (This must be done before another batch can be started.)

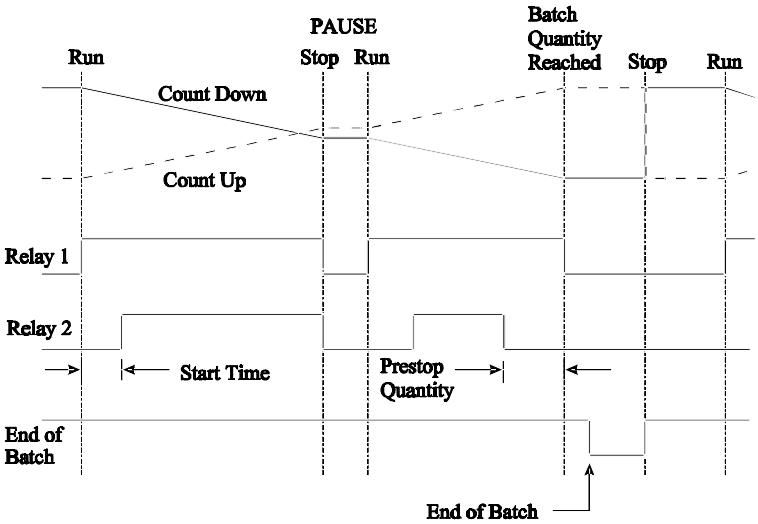

2. If Automatic Reset is configured on, a new batch is commenced each time the RUN key is pressed.

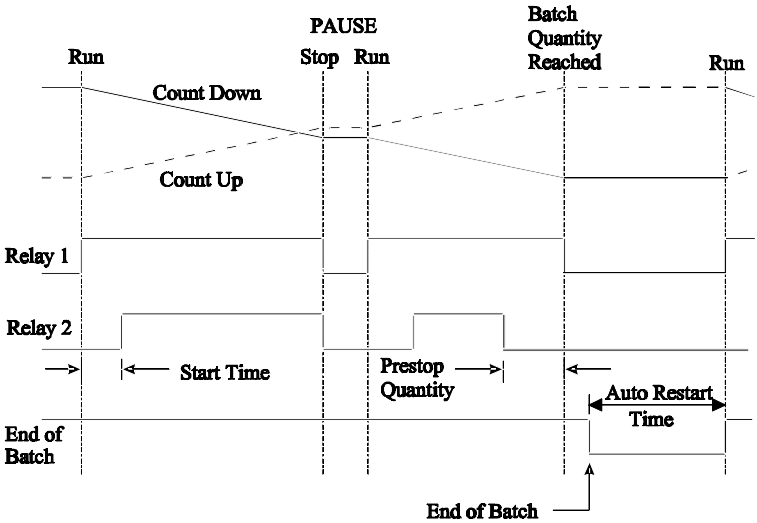


The Batch Controller can be configured to either count up from zero on each batch or to count down from the preset batch quantity.

### 3.2.1 Control Relays

The two control relays can be set up to control a single valve or a dual valve with slow-stop and/or slow-start. Alternatively, the second relay can be used to control a pump.

The relay operation is shown on the previous two pages.

A time delay between the Batch Start and the time when Relay 2 energizes can be set to provide a soft start up. The delay can range from 0 (no delay) to 79 minutes and 59 seconds.

A Prestop quantity (i.e., the quantity to the end of the batch) can also be set to provide a slowdown of flow at the end of the batch, thereby enabling precise quantities to be batched.

The process can be stopped at any time by pressing the STOP key, whereby both relays will immediately de-energize. The process can then be aborted and the batcher reset by pressing the STOP key again, or the process continued by pressing the RUN key.

If the process is continued and the instrument was previously in the slow-start or main control phases (i.e., not the prestop phase), the timer will be reset and a slow-start will occur with a full time delay to ensure a correct start up. The totals will not be reset and the batch quantity will remain unchanged.

### 3.2.2 Signal Timeout

The Signal Timeout period defines a time interval which is used to detect if the flow has stopped. If there is no signal input for a time greater than the Signal Timeout period the flow is deemed to have stopped. The Signal Timeout period has two functions:

- To detect the loss of signal during a batch when the relays are energized. In this case, the Batcher will enter a Flow Alarm condition and de-energize the relays.
- After the preset batch quantity has been reached and the relays de-energize, some overrun of flow may occur due to slow valve closure, etc. In this case, the Signal Timeout is used to determine when the flow has ceased and thereby accurately determine the amount of overrun.

It is recommended that Signal Timeout periods be kept fairly short, but long enough such that the timeout period is significantly longer than the time period between successive input pulses from the flowmeter at the minimum flowrate.

The instrument enables the user to set a time interval of up to 99 seconds to detect an absence of signal input. **If the Signal Timeout is set to 0, this function is disabled.**

***Flow Alarm***

If a Signal Timeout is set greater than zero and loss of signal is detected during a batch, a Flow Alarm signal is outputted on terminal 7. In addition, both control relays are de-energized. The Flow Alarm output and condition is maintained until acknowledged by pressing the STOP key. The alarm condition is also signaled to the operator by the flashing STOP LED. Once acknowledged, the process can then be reset via the STOP key or continued by pressing the RUN key.

### 3.2.3 End-of-Batch

The End-of-Batch is defined as being when the Batch Quantity is reached, the flow has stopped, and the Signal Timeout period has expired.

If the Signal Timeout is set to zero, the End-of-Batch is defined as being when the Batch Quantity is reached, regardless of whether the flow has stopped.

The Batch Controller cannot be reset or restarted until the End-of-Batch and similarly, for an RS232/422/485 interface, data will not be output until the End-of-Batch has been determined. Consequently, it is strongly recommended that the Signal Timeout period be kept fairly short.

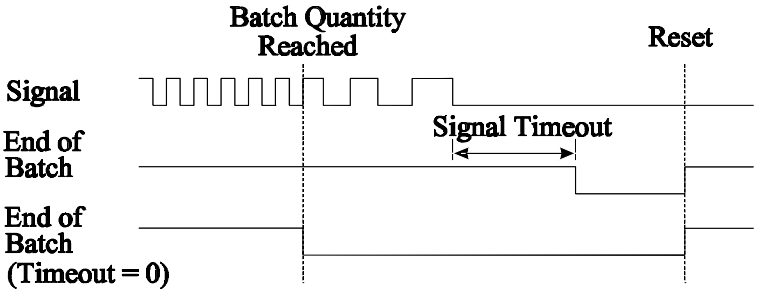


***End-of-Batch Signal***

An End-of-Batch signal from an open collector transistor is output on terminal 30 and the output is identical to the Output Pulse circuit as shown in Section 3.7.

When reaching the End-of-Batch, the output transistor is switched on and will remain in the "on" state until the instrument is reset.

### 3.2.4 Auto Restart

The Batch Controller can be configured to continually repeat the batch process. This mode of operation is selected during the configuration process.

The process is started by pressing the RUN key whereby the normal batch operation is commenced. After reaching the End-of-Batch (see Section 3.2.3), the Batch Controller will then wait for a pre-programmed period before automatically resetting and starting the batch process again.

The STOP key can be pressed at any time to interrupt the batching process and the process can be continued using the RUN key. If, however, the process is to be aborted, the STOP key is pressed again. The Batch Controller is reset and to restart the auto batching process the RUN key is pressed.

### 3.2.5 Automatic Overrun Compensation

The Batch Controller can be configured to automatically compensate for any overrun at the end of a batch.

Typically, this is due to the slowness of a valve to close or a pump to stop pumping on receiving a signal from the Batch Controller. The result is that the batch quantity will always read higher than the batch quantity set.

The Automatic Overrun Compensation can be enabled or disabled during the configuration process and this feature should only be used if the overrun is repeatable. The user is cautioned against using Automatic Overrun Compensation if the overrun is erratic such as may occur with changing back pressures or sticking valves.

In calculating the amount of overrun to be compensated for, the Batch Controller uses the average overrun on the last three batches.

The overrun is defined as the difference between the batch quantity set by the user and the batch total once the flow has stopped.

With Automatic Overrun Compensation, **the Signal Timeout must be set to a value greater than zero**.

Once the Batch Controller de-energizes both relays, the instrument looks for a Signal Timeout, indicating that the maximum interval between pulses has occurred and that the flow must, therefore, have stopped. It then uses the overrun quantity measured during this period and averages this together with the overrun on the last two batches. The resulting value is then subtracted from the next batch.

## 3.3 Calculation of Rate and Total

### 3.3.1 Frequency Input

The flowrate, R, is calculated as follows:

$$R = \frac{fxH}{S}$$

where $f$ is the input frequency in Hz.
$H$ is the timebase of rate and is 1 for seconds, 60 for minutes,3600 for hours, and 86,400 for days.
$S$ is the Scaling Factor.

The Scaling Factor, *S*, is equal to the K-factor of the flowmeter expressed in pulses per unit volume.

The user sets the Scaling Factor and selects the timebase during the configuration process as detailed in Section 5 of this manual.

### 3.3.2 Filtering

Frequency fluctuations caused by pulsating flow through a flowmeter, often makes the Rate impossible to read with any precision.

The Batch Controller has a digital filter which will average out these fluctuations and enable the Rate to be read to four digit accuracy. The degree of filtering is fully configurable which means that highly accurate and stable readings can be obtained without excessive lag.

The diagram below shows a pulsating signal input together with the effect of filtering.

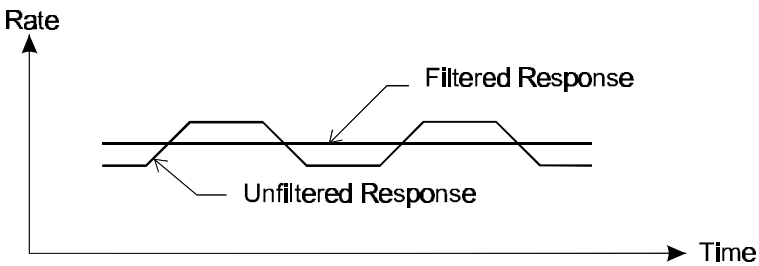


As a guideline to the degree of filtering to be used, the following table shows the response to a step change in input. The value, *A*, is the filter constant which is set during the configuration process. The times for the display value to reach 90% and 99% of full swing are given in seconds for different values of *A*.

| ***A*** | ***90%*** | ***99%*** |
|---|---|---|
| 1 | 0 | 0 |
| 2 | 1 | 2 |
| 4 | 2 | 4 |
| 6 | 3 | 6 |
| 10 | 5 | 11 |
| 15 | 8 | 17 |
| 20 | 11 | 22 |
| 25 | 14 | 28 |
| 35 | 20 | 40 |
| 45 | 25 | 51 |
| 60 | 34 | 69 |
| 75 | 43 | 86 |
| 90 | 52 | 103 |
| 99 | 57 | 113 |

Table 1 - Response to a step Input (in seconds).

Note: if *A* is set to 1, there is **NO** filtering of the input signal.

## 3.4 Total Conversion

The Total Conversion feature enables the rate to be displayed in one engineering unit (e.g., gallons/minute) and the totals to be displayed in another engineering unit (e.g., barrels).

The Scaling Factor is always set in the unit relating to Rate and the Total Conversion constant is a division factor which can be used to convert the totals to the different unit. The Total Conversion factor affects the net, accumulated, and gross totals and is limited between 0.01 and 2000.

***For Example***

If the Rate is required in gallons per minute:

1. The Scaling Factor would be set to pulses per gallon
2. The timebase would be set to minutes

If the Totals are required in barrels:

3. The Total Conversion factor is set to 42 (there are 42 gallons in a barrel). All totals, including the Batch Quantity and Batch Total, will now be in barrels.

Some common units are given below together with the Total Conversion constant (TOTCON) which should be set.

| Rate* | Totals | TOTCON |
|---|---|---|
| Gallons (US)/ | Barrels (oil) | 42.00 |
| Liters/ | Kiloliters | 1000 |
| ml/ | Liters | 1000 |
| Mgallons/ | Acre-feet | 0.32587 |

* Units per second, minute, hour or day. The timebase is set separately during configuration.

## 3.5 The Output Pulse and Flow Alarm

An **OUTPUT PULSE** is available on terminal 10 for driving remote counters and produces a pulse each time the Accumulated Total increments by one digit. For example, if the Accumulated Total has a resolution of 0.01 gallons, a pulse is produced each 0.01 gallons.

The pulse is a current sinking pulse of approximately 10msec produced by an open collector transistor and can sink up to 100mA. The maximum pulse rate is limited to 49 pulses per second and the resolution on the Accumulated Total must be set so that the Accumulated Total increments at less than 49 counts per second.

Note that due to the uneven pulse output spacing on this output, the pulse output cannot be used to drive rate indicators.

The **FLOW ALARM** uses an identical circuit to the Output Pulse and is available on terminal 7.

The Flow Alarm will output an alarm condition if the flow times out during a batch (i.e., there is no flow registered for a time greater that the Signal Timeout period, provided the Signal Timeout is greater than 0).

The Flow Alarm output will switch “on” (i.e., the signal goes low) whenever an alarm condition exists. The Alarm will switch “off” (i.e., the signal goes high) when the alarm is reset by pressing the DISPLAY key.

Connection of Output Pulse/Flow Alarm is as follows:

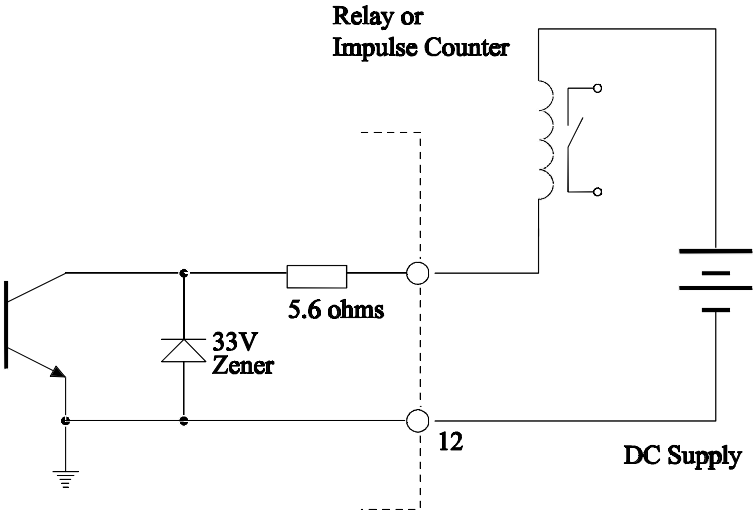


Driving an External Relay or Impulse Counter

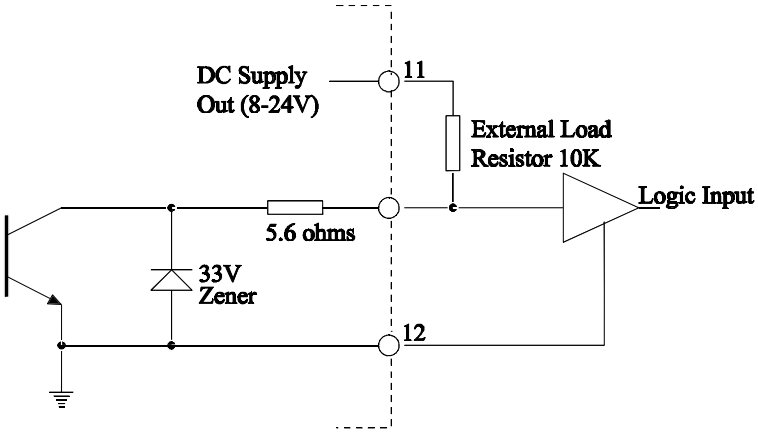


Driving a Logic Input such as a PLC or Electronic Counter

# 4. Options

## 4.1 The RS232/422/485 Interface Option

With this option installed, the circuits for both the RS232 and RS422/485 interfaces are provided as standard. They can be used to interface to both printers and computers. A number of standard printer protocols are built into the instrument.

### 4.1.1 Hardware

The following diagram provides an overview of the RS232/RS422/RS485 communications hardware. All three interfaces are available on the rear terminal strips and the user can select either one by making the appropriate connections.

The RS232 interface is primarily used with printers or for simple communication with a computer over a short distance. The RS422 and RS485 interfaces are used for communication over a long distance or in applications requiring multipoint communication.

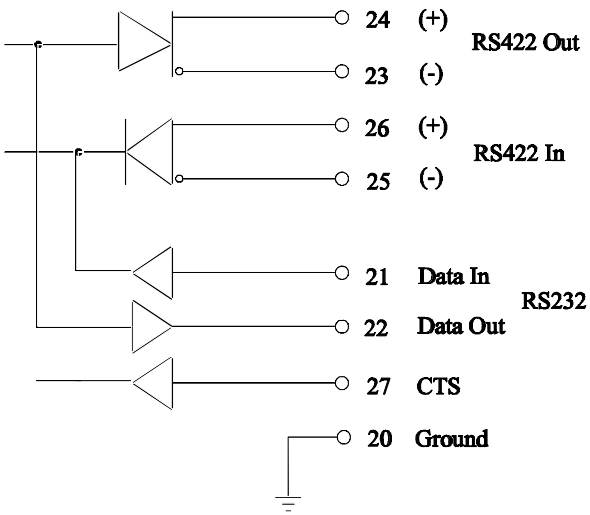

### 4.1.2 Multipoint Communication

Multipoint Communication is a system whereby a number of instruments can be addressed over a dual twisted pair interface. Up to 32 instruments can be connected to a common bus using the RS422 and RS485 interfaces as shown below.

To convert the RS422 interface to an RS485 interface, the RS422 (-) Data In Terminal must be connected to the RS422 (-) Data Out Terminal and the RS422 (+) Data In Terminal must be connected to the RS422 (+) Data Out Terminal. These connections will convert the RS422 4 wire interface to the RS485 2 wire interface, as shown in Figure 2.

Each instrument can be configured with a unique address which is used by the Master Controller (e.g., an IBM/PC) to identify each instrument. The Controller will send the address down the line and will alert the relevant instrument. Subsequent software protocol will control the flow of data between the Controller and the Instrument.

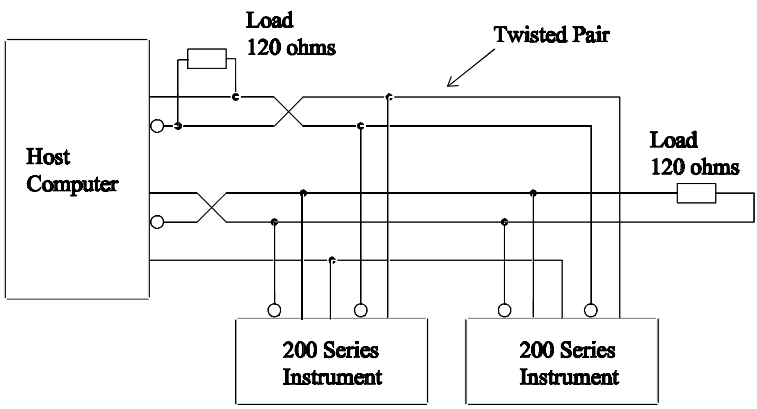


Figure 1 RS422 Interface

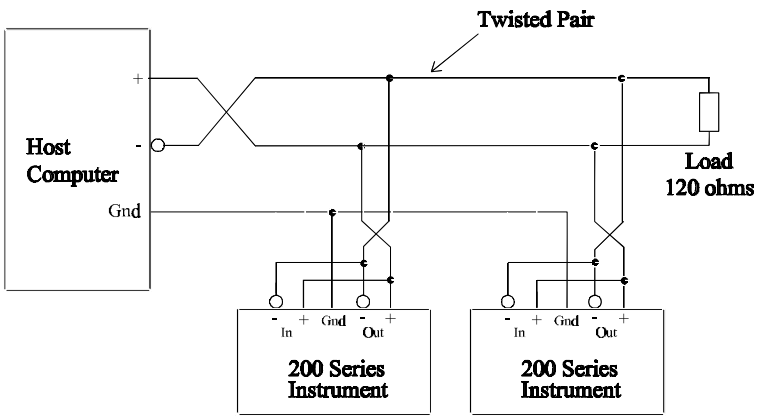


Figure 2 RS485 Interface

### 4.1.3 Communication Protocol

The RS232/422/485 option has a real time clock and enables the time and date to be set and printed on tickets. The date format can be European (days/months/years) or USA (months/days/years) while the time is on a 24 hour clock.

Note that the clock will only retain its time for 3 days (minimum) if there is no power connected to the instrument. After this period, the clock may need to be reset.

The baud rate, parity, and word length can be selected during configuration and the user must ensure that these correspond to the setting on the printer or computer with which the instrument is communicating.

The software protocols can be selected during configuration to provide standard interfaces to a number of printers and computers. Since other interfaces will continue to be added, the user should consult the factory for the latest protocols and/or printer drivers.

*Printer*

A ticket is printed each time the RESET key is pressed. The instrument prints the ticket before resetting the resettable total. Protocols are provided to drive the following printers:

1. Standard Computer Printer (Note that the printer must have an RS232 Serial Interface)
2. EPSON CTM290 Slip Printer
3. Contrec Model 624
4. EPSON TM290-2 Slip Printer
5. Contrec Model 632-2
6. Syntest SP-210

Consult with the factory if any other printer is to be interfaced with the instrument.

The tickets can also be printed with a number of different units of measure including liters and gallons. The units of measure are selectable from a pre-programmed list.

A CTS input is provided and prevents the instrument from transmitting any further characters to a printer if the printer buffer is full. The CTS

input is usually connected to the "Data Buffer Full" output from the printer.

If the printer buffer is large enough to handle the message output from the instrument, then this input need not be used and should be left unconnected.

*Computer*

The instrument receives and transmits messages in ASCII with all command strings to the instrument terminated by a carriage return. While replies from the instrument are terminated with a carriage return and a line feed.

Xon/Xoff protocol is also supported and the instrument will automatically determine if the message sent by the host computer is preceded by an Xoff character. If it does recognize an Xoff as the first character of a command string, the instrument will automatically switch to the Xoff/Xon protocol beginning and ending all messages with Xoff and Xon characters respectively. Xoff/Xon protocol is only available when the RS232 interface is selected.

During configuration, the instrument can be configured to operate in a full duplex or half duplex transmission mode. In full duplex mode, all commands sent to the instrument are echoed back to the host computer. In half duplex, the commands are not echoed.

# 5. Configuration

The Configuration process enables the Setup Parameters to be configured, as well as enabling the input signals to be checked.

The configuration process can be entered in one of two ways:

1. By connecting a wire link (or switch) to the rear terminal strip across terminals 1 and 2
2. By pressing the TOTAL key and while holding, pressing the RESET key. Both keys must then be held for approximately 6 seconds. This second method of access can be disabled during the configuration so that it is only possible to enter the configuration process via the link across terminals 1 and 2.

The key switch actions are during Configuration are as follows:

| | |
|---|---|
| **RUN** | changes a flashing digit to the next digit. |
| **DISPLAY** | increments a flashing digit or changes a parameter selection. |
| **BATCH SET** | resets a flashing digit to zero. |
| **STOP** | steps through the configuration sequences. |

Note that the arrows in the RUN and DISPLAY key switches indicate that these switches can be used to change and increment digits respectively.

In stepping through the configuration sequence, the Parameter Description is always displayed first, followed by the actual value or parameter. When a value or parameter can be changed, it is always shown as flashing and the LED's in the switch panels are lit if that key switch can be used to change a value.

On first entering the Configuration routine, the display will show:

| | |
|---|---|
| **CAL** | Setup Program parameters |
| **Batch** | Enter Batch parameters |
| **Option** | Options (if installed) |
| **Test** | Check Input Signals |
| **End** | Exit to Normal Operation |

The user can toggle between these modes using the DISPLAY key and by using the STOP key select the appropriate mode.

To exit Configuration, step through the Setup program, Batch program, or Test program until the end and press the STOP key when **End** is displayed (ensure the configuration link is removed).

## 5.1 Configuring the Setup Parameters

| *Step* | *Display* | *Description* | *Text Ref* |
|---|---|---|---|
| 1 | ***CAL*** | Setup Program Parameters | |
| | *BATCH* | Set Batch Parameters | 5.2 |
| | *OPTION* | Options (if installed) | 5.3 |
| | *TEST* | Check Input Signals | 5.4 |
| | *END* | Exit to normal operation | |
| | *The following steps are displayed when **CAL** is selected.* | | |
| 2 | ***RESTOT*** | Reset all totals to zero. To clear all totals (resettable and accumulated) press the BATCH SET key once. | |
| 3 | ***SCALE*** | Scaling Factor. | |
| | *Fact* | Enter the Scaling factor (K-factor) of the flowmeter. | 3.3.1 |
| 4 | ***F dPt*** | Number of decimal points with which the Rate is to be displayed between 0 to 0000. | |
| 5 | ***t.base*** | The Timebase with which the Rate is calculated must be entered as: | 3.2.1 |
| | *60secs* | units/min | |
| | *hours* | units/hour | |
| | *days* | units/day | |
| | *secs* | units/second | |
| 6 | ***FILTER*** | The filter constant for filtering the rate display. | 3.3.2 |
| | *1* | No filtering. | |
| | *to* | | |
| | *99* | Very heavy filtering. | |
| 7 | ***TOTCON*** | A division factor to convert the totals to different units from those used for rate (e.g., gallons/min and barrels). | 3.30 |
| | *1* | Rate and totals have the same engineering units. | |
| | *x.xxxx* | Other factors can be programmed between 0.01 and 2000. | |
| 8 | ***t.dPt*** | Number of decimal points with which the resettable total is displayed between 0 to 00. | |

| *Step* | *Display* | *Description* | *Text Ref* |
|---|---|---|---|
| 9 | ***A.dPt*** | Number of decimal points with which the Accumulated (non resettable) total is displayed between 0 to 00. | |
| 10 | ***ACCESS*** | Enable access to configuration routine via the front keyboard only. | |
| | *Front* | Enable access via front keyboard. | |
| | *No Acc* | Disable access via front keyboard. | |

## 5.2 Entering the Batch Parameters

| *Step* | *Display* | *Description* | *Text Ref* |
|---|---|---|---|
| 1 | ***BATCH*** | Set Batch Parameters | |
| | *OPTION* | Options (if installed) | 5.3 |
| | *TEST* | Check Input Signals | 5.4 |
| | *END* | Exit to normal operation | |
| | *CAL* | Setup Program Parameters | 5.1 |
| | *The following steps are displayed when **BATCH** is selected.* | | |
| 2 | ***BATCH L*** | Maximum Batch Size which can be entered. | 3.2 |
| | *xxxxxx* | Set to 0 if no limit on batch size. | |
| 3 | ***AUTO S*** | Automatic restart feature. | |
| | *Off* | Disable | |
| | *On* | Enable | |
| | *xx:xx* | If enabled, automatically restarts the batch xx:xx (mins:sec) after the end of the last batch. | 3.2.4 |
| 4 | ***START T*** | Slow start time. | |
| | *xx:xx* | Time, in minutes:seconds, when Relay 2 will energize once the batch has started. | 3.2 |
| 5 | ***PREST*** | Prestop Quantity. | |
| | *xxxx* | Quantity at which Relay 2 will de-energize before the end of the batch. (e.g., If the batch quantity is 100 liters and Prest is 2 liters, relay 2 will de-energize after 98 liters.) | 3.2 |
| 6 | ***COUNT*** | The Batch Total counts Up or Down. | |
| | *dn* | Count down from the batch quantity. | 3.2 |
| | *up* | Count up from zero. | |
| 7 | ***T OUT*** | The Signal Timeout in seconds (Setting to 00 disables this feature.). | 3.2.2 |
| 8 | ***AOC*** | Automatic Overrun Compensation. | |
| | | Note that the Signal Timeout must be greater than 0 (i.e., enabled) for this feature to work. | 3.2.5 |
| | *En* | Enable. | |
| | *Dis* | Disable. | |

| *Step* | *Display* | *Description* | *Text Ref* |
|---|---|---|---|
| 9 | ***OUT 30*** | Output on Terminal 30. | |
| | *PC* | "Pump Control". | |
| | *EOB* | End of Batch output | |
| 10 | ***AUTO R*** | Auto Reset (not displayed if Auto Restart is programmed - Step 3 above). | 3.2 |
| | *Off* | Batch Total must be manually reset before starting the next batch. | |
| | *On* | The Batch can be automatically reset and started by pressing only the RUN key. | |

## 5.3 Configuring the Options

| *Step* | *Display* | *Description* | *Text Ref* |
|---|---|---|---|
| 1 | ***OPTION*** | Options (if installed) | |
| | *TEST* | Check Input Signals | 5.4 |
| | *END* | Exit to normal operation | |
| | *CAL* | Setup Program Parameters | 5.1 |
| | *BATCH* | Set Batch Parameters | 5.2 |
| | *If the RS232/422/485 option is installed, the following will be displayed:* | | |
| 2 | ***DF*** | Date Format. | 4.1 |
| | *Eur* | European (i.e., days/months/years). | |
| | *USA* | USA (i.e., months/days/years). | |
| 3 | ***Date*** | Enter date as: | 4.1 |
| | *xx:xx:xx* | Years:Months:Days. | |
| 4 | ***HOUR*** | Enter time as a 24 hour clock. | |
| | *xx:xx* | Hours:Minutes. | |
| 5 | ***BAUD*** | Baudrate | |
| | *xxxx* | 300, 600, 1200, 2400, 4800, or 9600 | |
| 6 | ***DATA*** | Word length. | |
| | *7* | 7 bits | |
| | *8* | 8 bits | |
| 7 | ***PARITY*** | Parity. | |
| | *NP* | No Parity | |
| | *OP* | Odd Parity | |
| | *EP* | Even Parity. | |
| 8 | ***SIGNAL*** | Signal Type. | |
| | *rs232* | RS232 | |
| | *rs422* | RS422/RS485 | |
| 9 | ***ID NO*** | Unit Identification Number. | |
| | *0* | None | |
| | *1 - 99* | Id Number. | |
| 10 | ***PTYPE xx*** | Printer/Computer Type. | |
| | *00* | Standard Computer Printer | |
| | *01* | EPSON CTM 290 Slip Printer | |
| | *02* | Contrec Model 624 Printer | |
| | *03* | EPSON TM290-2 Slip Printer | |

| *Step* | *Display* | *Description* | *Text Ref* |
|---|---|---|---|
| | *04* | Contrec Model 632-2 Printer | |
| | *05* | Syntest SP-210 Printer | |
| | *20* | Computer | |

*If a Printer Protocol is selected, the following message is displayed:*

| | | | |
|---|---|---|---|
| 11 | ***UNIT xx*** | Units of measurement printed. | |
| | *00* | None | |
| | *01* | Liters (Ltrs). | |
| | *02* | Gallons (Gals) | |
| | *03* | Barrels (bbls) | |
| | *04* | Pounds (lbs) | |
| | *05* | Grams (gms) | |
| | *06* | Kilograms (kgs) | |
| | *07* | Tons (tons) | |

*If a Computer Protocol is selected, the following message is displayed:*

| | | | |
|---|---|---|---|
| 11 | ***ECHO*** | ECHO Commands. | |
| | *On* | Echo (Full Duplex) | |
| | *Off* | No Echo (Half Duplex) | |

## 5.4 Checking the Input Signal

| *Step* | *Display* | *Description* | *Text Ref* |
|---|---|---|---|
| 1 | ***TEST*** | Check Input Signals | |
| | *END* | Exit to normal operation | |
| | *CAL* | Setup Program Parameters | 5.1 |
| | *BATCH* | Set Batch Parameters | 5.2 |
| | *OPTION* | Options (if installed) | 5.3 |
| | *The following steps are displayed when **TEST** is selected.* | | |
| 2 | ***Sr x.xx*** | Software revision number. | |
| 3 | ***Freq*** | Displayed for 1 second followed by the actual frequency. | |
| | *xxxx.x* | Frequency in Hz. | |
| | *If the RS232/422/485 option is installed, the display will then show:* | | |
| 4 | ***CLOC*** | Clock. | |
| | *xx:xx:xx* | Time in Hours:Mins:Sec. | |

# 6. Input Circuits

This section covers the connection of flowmeter signals for the Model 214D Series Batch Controllers.

The 214D Series has a regulated power supply output which can be used to power sensors. A trimpot on the rear of the instrument allows the voltage to be adjusted in the range of 8-24 Volts and the output can supply a maximum of 50mA.

## 6.1 Input Circuit for the 214D Series

The 214D Series has an input conditioning card which will accept signals from most pulse or frequency producing flowmeters. An 8 position DIP switch on the rear panel enables the input circuit to be configured for different signal types.

The input will interface directly to:

- Turbine Flowmeters
- Open Collector Outputs
- Reed Switches
- Logic Signals

The following pages give examples of the interconnection to various signal outputs and a circuit diagram of the input is also provided.

*Switch Settings*

The following switch settings are recommended for different input signal types.

| Input Signal Type | Input Terminals | | Switch Settings | | | | | | | |
|---|---|---|---|---|---|---|---|---|---|---|
| | CH1 | | | | | | | | | |
| | (+) | (-) | 1 | 2 | 3 | 4 | 5 | 6 | 7 | 8 |
| a. Logic Signal, CMOS, Pulse | 9 | 8 | off | off | off | off | on | off | off | off |
| b. Open Collector or Reed switch | 9 | 8 | off | off | off | off | on | off | on | off |
| c. Namur Proximity (set DC out to 8 volts) | 11 | 9 | off | off | on | on | on | off | off | off |
| d. Switch or Reed Switch with debounce circuit (200Hz max) | 9 | 8 | off | off | off | off | on | off | on | on |
| e. Coil (20mV P-P minimum) | 9 | 8 | off | on | off | off | off | off | off | off |
| f.. Coil (low Impedance; 22mV pp minimum) | 9 | 8 | on | on | off | off | off | off | off | off |

*General Specification*

Switching Threshold: 2.5 Volts (except for input type c, e, and f)

Maximum Input Voltage: 50V peak

Input Impedance:

| | |
|---|---|
| Input type a: | 100K |
| Input types b & d: | 10K |
| Input type c: | 1K |
| Input type e: | 100K |
| Input type f: | 2.4K |

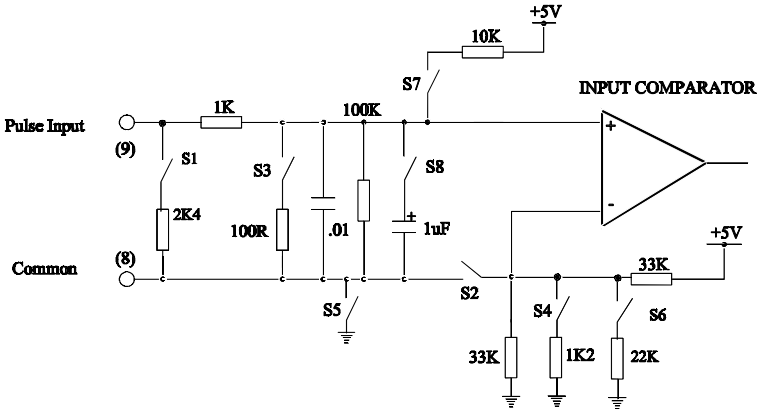


The Frequency Input Circuit

1. MAG Coil

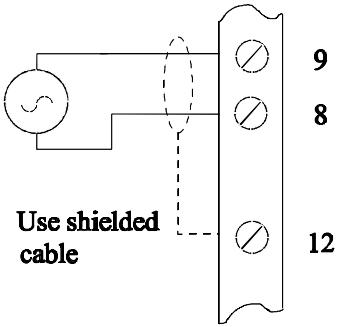


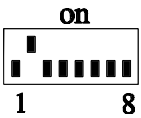


e.g., millivolt signal from a turbine flowmeter (single input only)

2. Redi-Pulse, CMOS or Pulse

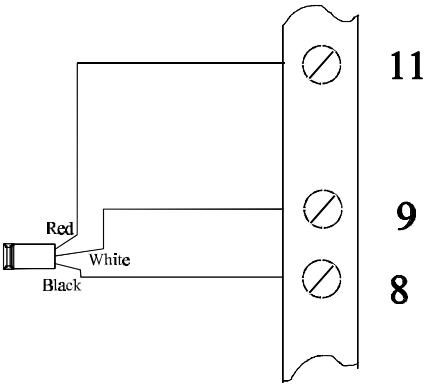


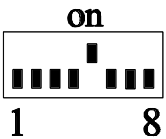


3. Redi-Pulse, Open Collector

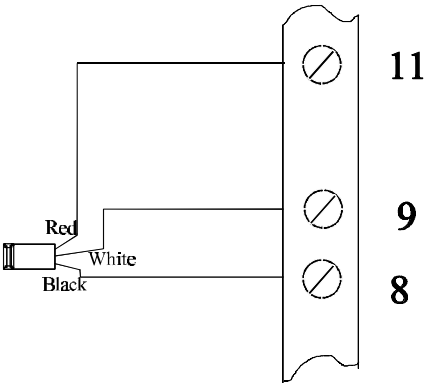


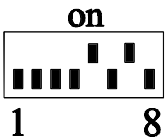

4. Squarewave, CMOS or Pulse

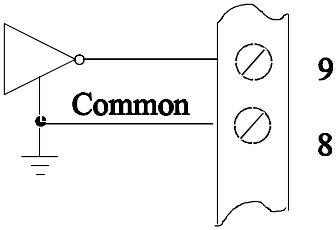


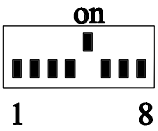


e.g., vortex, pre-amplifiers or magnetic flowmeters

5. Open-Collector

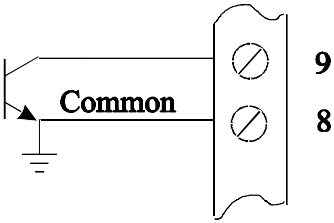


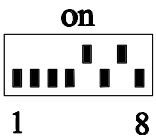


e.g., hall effect sensor

6. Reed Switch

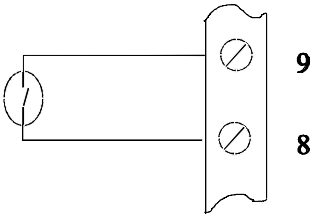


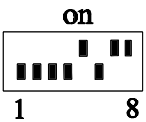


e.g., positive displacement flowmeters with reed switch output

## 6.2 Remote Key Switches

Remote push-buttons can be connected to the Model 214D-1 to duplicate the keys on the front panel.

The switches are wired as follows:

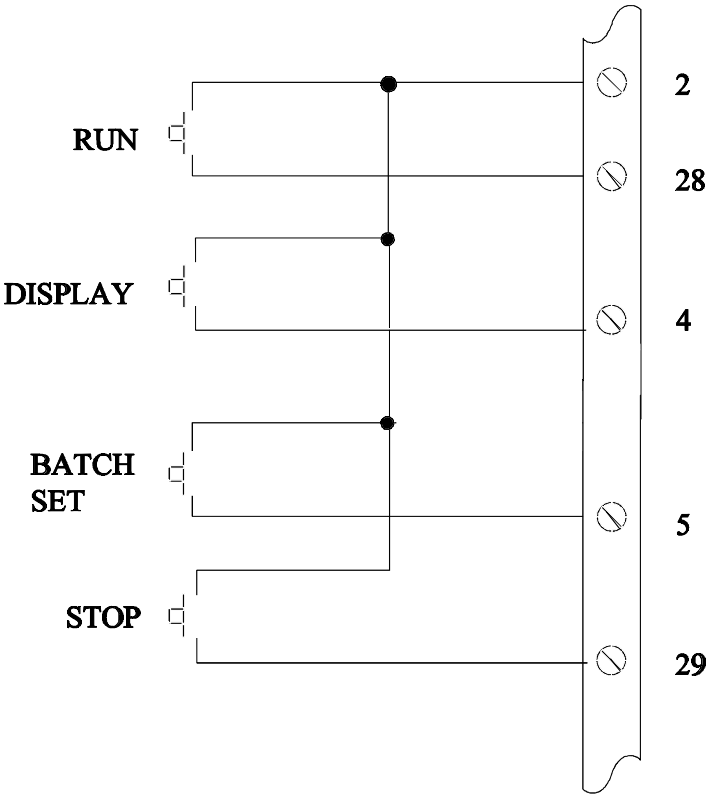

# 7. Installation

## 7.1 General

Terminal designations for the Model 214D Batch Controller are given on the following pages. The cutout hole in the panel should be 5.5" (139mm) wide x 2.6" (67mm) high. Two side clips are supplied to secure the instrument into the panel.

A case grounding point is provided via a ground lug on the side of the case. Note that this grounding point is for the case only and there is complete electrical isolation between this point and all electronic circuits. For EMC purposes or when the instrument is connected to AC power source, this point must be connected to a good earth ground using a multi-stranded, braided wire or strap.

The two control relays are changeover relays and both the “normally open” and “normally closed” terminals are available on the rear terminal strip. All relay outputs are totally isolated from the case and from the internal circuitry.

A Supply Output Voltage is provided to power sensors. This output will provide a regulated voltage of 8 to 24 volts and the voltage is adjustable by means of the potentiometer on the rear panel. Maximum current is 50mA and the instrument comes with the voltage factory set at 24 Volts. When the instrument is powered from a DC power source, the maximum output voltage on the Supply Output is the DC Input Voltage less 3.5 volts.

The instrument will operate from either 12-28 volts DC or from the AC line. The AC voltage is factory set to either 95 - 135 VAC (110 VAC nominal) or 190 - 260 VAC (220 VAC nominal). An internal AC transformer provides full isolation between the AC line and the electronic circuits.

The DC Ground terminal 12 provides a common ground for the 12-28 Volt power input, the 8 - 24 Volt output, the pulse output, and the End-of-Batch output.

It is good practice to use shielded cables for all signal connections to the Model 214D. Care must be taken to separate signal cables from power cables so as to minimize interference. Overall shields should be connected to the case earth at the instrument end only. This connection

should be as short as possible and connected to the grounding lug on the side of the case.

In order to comply with the requirements for Electromagnetic Compatibility as per EMC-Directive 89/336/EEC of the Council of European Community, this wiring practice is mandatory.

Although it is also possible to connect shields to the signal ground (terminal 2) this practice is not in accordance with EMC directives.

*RC Networks for Interference Suppression*

When driving highly inductive loads with the control relays, it is recommended that RC suppression networks (often called "Snubbers") are used for two reasons:

- To limit the amount of electrical noise caused by arcing across the relay contacts which may, in extreme cases, cause the microprocessor to act erratically.
- To protect the relay contacts against premature wear through pitting.

RC suppression networks consist of a capacitor and series resistor and are commonly available in the electrical industry. The values of R and C are dependant entirely on the load. However, if the user is unsure of the type of snubber to use, values of 0.25µF and 100 ohms will usually suffice. Note that only AC voltage approved RC suppression networks should be used.

The basic principle of operation is that the capacitor prevents a series of sparks from arcing across the contact as the contact breaks. The series resistor limits the current through the contact when the contact first makes

## 7.2 Terminal Wiring Designations

| *Terminal* | *Description* |
|---|---|
| 1 | Configuration Link |
| 2 | Signal Ground |
| 3 | Not Used |
| 4 | Remote DISPLAY Switch |
| 5 | Remote BATCH SET Switch |
| 6 | Not Used |
| 7 | Flow Alarm |
| 8 | Flow Common (-) |
| 9 | Flow Pulse Input |
| 10 | Pulse Out |
| 11 | DC Power Out (8-24 VDC) |
| 12 | DC Ground (-) |
| 13 | DC Power Input (+) |
| 14 | Not Used |

| *Terminal* | *RS232/422/485 Option* |
|---|---|
| 20 | RS232 Signal Ground |
| 21 | RS232 Data in |
| 22 | RS232 Data Out |
| 23 | RS422/485 (-) Data Out |
| 24 | RS422/485 (+) Data Out |
| 25 | RS422/485 (-) Data In |
| 26 | RS422/485 (+) Data In |
| 27 | RS232 CTS |

| *Terminal* | *Relay Option & Switches* |
|---|---|
| 28 | Remote RUN Switch |
| 29 | Remote STOP Switch |
| 30 | End of Batch/Pump Control Signal |
| 31 | Relay 2 - Normally Open |
| 32 | Relay 2 - Normally Closed |
| 33 | Relay 2 - Common |
| 34 | Relay 1 - Normally Open |
| 35 | Relay 1 - Normally Closed |
| 36 | Relay 1 - Common |

# 8. Trouble Shooting

*Batcher does not reset*

The Signal Timeout has been set to an excessively long period and has not timed out at the end of the last batch.

*Batch will not start or relay 1 will not close*

Ensure that the instrument has not timed out as controlled by the Signal Timeout and that a Flow Alarm condition does not prevail. Pressing the Stop switch will cancel this condition. Check for a fault on the flow input before restarting.

*Batcher stops during a batch (prior to batch end)*

This could be due to the Signal Timeout having timed out. Check for a fault in the system. Ensure that the Signal Timeout period is significantly longer than the period between flowmeter pulses at the minimum flowrate.

*No display*

Check for power to the instrument.

*All 88888888 displayed*

The Batcher displays all eights on power-up for 4 seconds as a display test. If all eights continue to display after this period, this is symptomatic of the power supply voltage being low. Check the power input voltage.

*Not counting.*

If the Batcher does not count with the flowmeter connected and flow passing through it, first check the connections and then ensure the DIP switches on the rear of the instrument are set correctly for the attached flowmeter.

It is possible to manually test the input circuit of the Batcher by setting the input configuration for a Reed Switch and pulsing across the signal (+) and (-) with a wire link. When doing this, the

Scaling Factor should be set to 1 and the Resolution to whole numbers.

*Counting erratically*

This can be caused by two factors:

- Setting the input circuit incorrectly
- Lack of shielding on the input wiring

Ensure that the input selection DIP switch is correctly set for the flowmeter attached. Shield the input signal with the shield connected at the batch controller only.

*Instrument acting erratically*

Erratic operation can be the result of severe electrical interference. Considerable attention has been given to designing the Batch Controller to withstand electrical interference.

However, in extreme cases, loads may be encountered which are exceptionally inductive and may require additional protection. One measure is to use an RC Suppression Network as described in the previous section of this manual.

Another remedy for this problem is to use an isolating relay to switch the load and use the Batcher to drive the isolating relay. The isolating relay should be mounted away from the Batcher and from the signal wiring.

*No end of batch, pulse output, or flow alarm*

This fault is usually caused by lack of a pull-up resistor or load on the output. The outputs have no internal pull-up resistors and require on an external load.

## 8.1 Error Codes

The instrument has extensive self test facilities and will display an error code if it detects an invalid condition. If the instrument displays an error code other than those listed below, please contact the factory.

Error codes are displayed as "Err ##" and a list of the commonly encountered codes are given below:

*Input Errors*

11 Invalid input configuration programmed.
13 Signal Timeout (see Section 3.2.2).
14 Communications Input error (RS232/422/485 interface).

*Output Errors*

21 Invalid output configuration.
22 Communications error - Baud rate not set.
23 Communications error - Printer fault.

*Configuration Errors*

30 Zero Value not allowed.
33 Invalid Printer Type.
34 Invalid Volume Units selected.

.

# Index

## S



## T



## W