Model: HIT-4G

Gas Flow Rate Indicator & Dual Totalizer
With Modbus & Data Logging

USER'S MANUAL

HP- 328
February 2021

HOFFER Flow Controls
Perfecting Measurement™

107 Kitty Hawk Lane • P.O. Box 2145 • Elizabeth City, NC 27909
1-800-628-4584 • (252) 331-1997 • Fax (252) 331-2886
www.hofferflow.com email: info@hofferflow.com

NOTICE

Hoffer Flow Controls, Inc. makes no warranty of any kind with regard to this material, including, but not limited to, the implied warranties of merchantability and fitness for a particular purpose.

This manual has been provided as an aid in installing, connecting, calibrating, operating, and servicing this unit. Every precaution for accuracy has been taken in the preparation of this manual; however, Hoffer Flow Controls, Inc. neither assumes responsibility for any omissions or errors that may appear nor assumes liability for any damages that result from the use of the products in accordance with information contained in the manual.

HOFFER FLOW CONTROLS' policy is to provide a user manual for each item supplied. Therefore, all applicable user manuals should be examined before attempting to install or otherwise connect a number of related subsystems.

During installation, care must be taken to select the correct interconnecting wiring drawing. The choice of an incorrect connection drawing may result in damage to the system and/or one of the components.

Please review the complete model number of each item to be connected and locate the appropriate manual(s) and/or drawing(s). Identify all model numbers exactly before making any connections. A number of options and accessories may be added to the main instrument, which is not shown on the basic user wiring. Consult the appropriate option or accessory user manual before connecting it to the system. In many cases, a system wiring drawing is available and may be requested from Hoffer Flow Controls.

HOFFER FLOW CONTROLS' policy is to make running changes, not model changes, whenever an improvement is possible. This affords our customers the latest in technology and engineering. The information contained in this document is subject to change without notice.

THIS WARRANTY IS EXPRESSLY IN LIEU OF ALL OTHER WARRANTIES, EXPRESSED OR IMPLIED, INCLUDING ANY IMPLIED WARRANTY OF MERCHANTABILITY OR FITNESS FOR A PARTICULAR PURPOSE. HFC SHALL NOT BE LIABLE FOR ANY LOSS OR DAMAGE RESULTING, DIRECTLY OR INDIRECTLY, FROM THE USE OR LOSS OF USE OF THE GOODS. WITHOUT LIMITING THE GENERALITY OF THE FOREGOING, THIS EXCLUSION FROM LIABILITY EMBRACES THE PURCHASER'S EXPENSES FOR DOWNTIME OR FOR MAKING UP DOWNTIME, DAMAGES FOR WHICH THE PURCHASER MAY BE LIABLE TO OTHER PERSONS, DAMAGES TO PROPERTY, AND INJURY TO OR DEATH OF ANY PERSONS. HFC NEITHER ASSUMES NOR AUTHORIZES ANY PERSON TO ASSUME FOR IT ANY OTHER LIABILITY IN CONNECTION WITH THE SALE OR USE OF HFC'S GOODS, AND THERE ARE NO ORAL AGREEMENTS OR WARRANTIES COLLATERAL TO OR AFFECTING THE AGREEMENT. *PURCHASER'S SOLE AND EXCLUSIVE REMEDY IS THE REPAIR AND/OR REPLACEMENT OF NONCONFORMING GOODS AS PROVIDED IN THE PRECEDING PARAGRAPHS. HFC SHALL NOT BE LIABLE FOR ANY OTHER DAMAGES WHATSOEVER INCLUDING INDIRECT, INCIDENTAL, OR CONSEQUENTIAL DAMAGES.*

LIMITED WARRANTY POLICY FOR HOFFER FLOW CONTROLS

HOFFER FLOW CONTROLS, INC. ("HFC") warrants HFC's Precision Series, API Series and CT Series of turbine flowmeters to be free from defects in material and workmanship under normal use and service, only if such goods have been properly selected for the service intended, properly installed and properly operated and maintained as described in the turbine flowmeter manual. Reference "turbine flowmeter manual" for specific details. This warranty shall extend for a period of five (5) years from the date of shipment to the original purchaser and covers the Precision Series, API Series, and CT Series of flowmeters supplied with their standard hybrid ceramic ball bearings only. All other HFC products carry a one (1) year warranty. This warranty is extended only to the original purchaser ("Purchaser"). *Purchaser's sole and exclusive remedy is the repair and/or replacement of nonconforming goods as provided in the following paragraphs.*

In the event Purchaser believes the Hoffer product is defective, the product must be returned to HFC, transportation prepaid by Purchaser, within the appropriate warranty period relative to the product. If HFC's inspection determines that the workmanship or materials are defective and the required maintenance has been performed and, has been properly installed and operated, the product will be either repaired or replaced, at HFC's sole determination, free of additional charge, and the goods will be returned, transportation paid by HFC, using a transportation method selected by HFC.

Prior to returning the product to HFC, Purchaser must obtain a Returned Material Authorization (RMA) Number from HFC's Customer Service Department within 30 days after discovery of a purported breach of warranty, but not later than the warranty period; otherwise, such claims shall be deemed waived. See the Return Requests/inquiries Section of this manual.

If HFC's inspection reveals the Hoffer product to be free of defects in material and workmanship or such inspection reveals the goods were improperly used, improperly installed, and/or improperly selected for service intended, HFC will notify the purchaser in writing and will deliver the goods back to Purchaser upon receipt of Purchaser's written instructions and agreement to pay the cost of transportation. If Purchaser does not respond within thirty (30) days after notice from HFC, the goods will be disposed of in HFC's discretion.

HFC does not warrant the product to meet the requirements of any safety code of any state, municipality, or other jurisdiction, and Purchaser assumes all risk and liability whatsoever resulting from the use thereof, whether used singlely or in combination with other machines or apparatus.

This warranty shall not apply to any HFC product or parts thereof, which have been repaired outside HFC's factory or altered in any way, or have been subject to misuse, negligence, or accident, or have not been operated in accordance with HFC's printed instructions or have been operated under conditions more severe than, or otherwise exceeding, those set forth in the specifications.

FOR **NON-WARRANTY** REPAIRS OR **CALIBRATIONS**, consult HOFFER FLOW CONTROLS for current repair/calibration charges. Have the following information available BEFORE contacting HOFFER FLOW CONTROLS:

1. P.O. number to cover the COST of the repair/calibration,
2. Model and serial number of the product, and
3. Repair instructions and/or specific problems relative to the product.

CONTENTS

1. INTRODUCTION

The HIT-4G is a microprocessor-based gas flow rate indicator and totalizer with data logger and Modbus Communications Protocol. The instrument can accept a low-level signal from a magnetic type pickup coil, a DC pulse signal, contact closure or modulated carrier pickup (MCP/RF). Pulses from the signal input are converted into volume and rate values based on flowmeter calibration settings stored in the instrument. Temperature, pressure and compressibility compensation may be used to calculate corrected volume and mass flow. The total and flow rate are displayed on a two-line liquid crystal display (LCD). A 4-20 mA analog signal proportional to the flowrate is output on the current loop. The HIT-4G is configurable from the instrument front panel keypad or via Modbus communications.

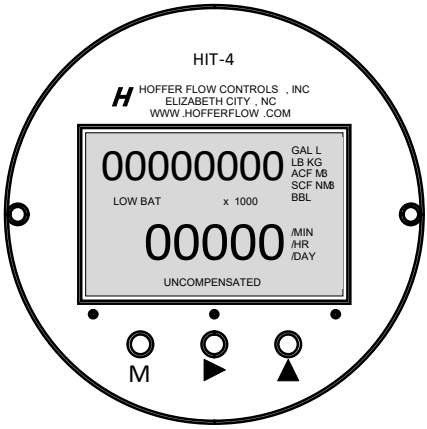

Figure 1 – HIT-4 Front Panel

Optional features include 20-point linearization to correct flow meter non-linearity, a Scaled Pulse Output and Alarm Output configurable for Rate or Total. An add-on printed circuit board provides additional inputs for temperature and pressure transmitters as well as 100 Ohm RTD.

Enclosure options include NEMA 4X, panel mount, IP66 rated aluminum and Ex d certified for hazardous areas. Most enclosure options may be wall mounted or directly mounted on a flowmeter using an optional riser.

This instrument is designed to conform to the EMC-Directive of the Council of European Communities 89/336/EEC and the following standards:

Generic Emission Standard EN 61000-6-3
Residential, Commercial & Light Industry Environment.

Generic Immunity Standard EN 61000-6-1
Residential, Commercial & Light Industry Environment.

Electrostatic discharge requirements EN 61000-4-2

Radiated, radio-frequency, electromagnetic immunity EN 61000-4-3

Electrical fast transient/burst requirements EN 61000-4-4

Immunity to conducted disturbances EN 61000-4-6

MODEL NUMBER DESIGNATION

MODEL HIT-4( )
TEMPERATURE AND PRESSURE COMPENSATED GAS FLOW RATE INDICATOR & DUAL TOTALIZER WITH MODBUS® & DATA LOGGING

MODEL **HIT-4(** A **)-(** B **)-(** C **)-(** D **)-(** E **)-(** F **)-(** G **)-(** H **)-(** I **)-(** J **)**

TYPE
ENCLOSURE STYLE
INPUT POWER
PULSE INPUT
PULSE OUTPUT
ALARM
COMPENSATION METHOD
MOUNTING
COMMUNICATION PORT
SPECIAL FEATURES

TYPE

MODEL **HIT-4(** A **)-(__)-(__)-(__)-(__)-(__)-(__)-(__)-(__)-(__)**

OPTION (A)

(G) GAS
(L) LIQUID
(U) UNCOMPENSATED

ENCLOSURE STYLE

MODEL **HIT-4(__)-(** B **)-(__)-(__)-(__)-(__)-(__)-(__)-(__)-(__)**

OPTION (B)

(2)* NEMA 4X ENCLOSURE (HIT-4U MOUNTED BEHIND ENCLOSURE)
(3)* ALUMINUM CASTING POWDER COATED ENCLOSURE (IP66)
(7)* STAINLESS STEEL ENCLOSURE (IP66)
(P) PANEL MOUNT ENCLOSURE (IP40)
(PD) PANEL MOUNT ENCLOSURE WITH CLEAR DOOR AND LOCK (IP40)
(PF) PANEL MOUNT ENCLOSURE WITH CLEAR FLEXIBLE PVC COVER (IP65 FRONT ONLY)

*** OPTIONS FOR ENCLOSURE STYLE 3 AND 7**

(_M) M20 CONDUIT THREAD. (NOT ALLOWED FOR USE IN CANADA)
(_S) SUNSHADE

INPUT POWER

MODEL **HIT-4**(__)-(__)-(C)-(__)-(__)-(__)-(__)-(__)-(__)-(__)

OPTION (C)

(B) BATTERY POWERED
NOTE: MAG ONLY, NO ANALOG, PULSE, OR ALARM

(L) 2-WIRE, 4-20MA LOOP POWERED 8-30VDC
NOTE: MAG ONLY, NO PULSE OR ALARM

(D) 12 TO 30 VDC POWERED
NOTE: 4-20MA ANALOG OUT INCLUDED

(AC) AC POWERED UNIVERSAL 100-240VAC @ 0.15A 50/60 HZ
NOTE: NOT AVAILABLE FOR Ex d CERTIFIED SYSTEMS 4-20MA ANALOG OUT INCLUDED

PULSE INPUT

MODEL **HIT-4**(__)-(__)-(__)-(D)-(__)-(__)-(__)-(__)-(__)-(__)

OPTION (D)

(M) MAGNETIC COIL, DRY CONTACT

(R) ISOLATED PULSE, RPM, RPR, HALL EFFECT COILS

(RF) MODULATED CARRIER COIL

PULSE OUTPUT

MODEL **HIT-4**(__)-(__)-(__)-(__)-(E)-(__)-(__)-(__)-(__)-(__)

OPTION (E)

(5*) 0-5V TTL/CMOS

(OC*) OPEN COLLECTOR

* INSERT (R) FOR RAW FREQUENCY PULSE OUTPUT

NOTE: NOT AVAILABLE WITH (B) OR (L) POWER INPUTS

ALARM - WITH USER-DEFINED LEVELS FOR RATE AND/OR TOTAL

MODEL **HIT-4**(__)-(__)-(__)-(__)-(__)-(F)-(__)-(__)-(__)-(__)

OPTION (F)

(5) 0-5V TTL/CMOS

(OC) OPEN COLLECTOR

NOTE: NOT AVAILABLE WITH (B) OR (L) POWER INPUTS

COMPENSATION METHOD-TEMP/PRESSURE LIQ/GAS

MODEL **HIT-4**(__)-(__)-(__)-(__)-(__)-(__)-(G)-(__)-(__)-(__)

OPTION (G)

(X) NO COMPENSATION, ALWAYS USE X ON HIT-4U
DEFAULT TEMPERATURE / PRESSURE COMPENSATION ON HIT-4G

(TP1_) TEMPERATURE AND PRESSURE TRANSMITTER INPUTS (4-20MA)

(TP2_) 100 OHM RTD (DIN385) / PRESSURE TRANSMITTER INPUTS (4-20MA)

COMPRESSIBILITY OPTION

(_Z) ADD (Z) COMPRESSIBILITY SOFTWARE FOR GAS APPLICATIONS EXCEEDING 50 PSIG. AT PRESSURES ABOVE 50 PSIG THE ERROR DUE TO COMPRESSIBILITY WOULD BE GREATER THAN ± 1.0%

NOTE: COMPENSATION (TP, TPZ) NOT AVAILABLE WITH (B) OR (L) POWER INPUTS

MOUNTING

MODEL **HIT-4(__)-(__)-(__)-(__)-(__)-(__)-(__)-(H)-(__)-(__)**

OPTION (H)

(X) REMOTE MOUNTING

(FX) STYLE 3 OR 7 ENCLOSURES MOUNTED ON TURBINE. MUST BE USED WITH "X" RISER TURBINE OPTION.

(FXHT) 8" LONG TEMPERATURE RISER FOR STYLE 3 OR 7 ENCLOSURE MOUNTED ON TURBINE. REQUIRED WHEN TEMPERATURES EXCEEDS 140 DEG. F. MUST BE USED WITH "X" RISER TURBINE OPTION.

(F) NEMA 4X STYLE 2 ENCLOSURE MOUNTED ON TURBINE. MUST BE USED WITH "X" RISER TURBINE OPTION.

(FHT) 8" LONG TEMPERATURE RISER FOR NEMA 4X STYLE 2 ENCLOSURES MOUNTED ON TURBINE. REQUIRED WHEN FLUID TEMPERATURES EXCEED 140 DEG. F. USED WITH "X" RISER TURBINE OPTION.

(NP) NEMA 4X ENCLOSURE PIPE MOUNTING KIT 2" PIPE OR SMALLER. SPECIFY IF PIPE IS VERTICAL OR HORIZONTAL.

SYSTEM CERTIFIED MOUNTING OPTIONS FOR ENCLOSURE STYLE 3 AND 7:

(MX_) METER MOUNTED
NOTE: USED WITH "X" RISER, AND 1" X ¾" SS ADAPTER. PROCESS TEMP -40°C TO +78°C.

(MA_) METER MOUNTED
NOTE: USE WITH A (X-ATEX) RISER. PROCESS TEMP -40°C TO +78°C.

(RX_) REMOTE MOUNTED
NOTE: USE WITH "X" RISER. INCLUDES "E2" JUNCTION BOX AND 1" X 3/4" SS ADAPTER.

(RA_) REMOTE MOUNTED
NOTE: USE WITH A (X-ATEX) RISER. INCLUDES "E2" JUNCTION BOX.

UNION OPTIONS:

(___U1) OPTIONAL 1" MALE X 1" FEMALE EX-PROOF UNION
NOTE: USE WITH MX AND RX OPTIONS

(___U2) OPTIONAL 3/4" MALE X 3/4" FEMALE EX-PROOF UNION
NOTE: USE WITH MA AND RA OPTIONS

SYSTEM CERTIFIED EXPLOSION-PROOF RATINGS:

STYLE 3 & 7: CSA/FM: CLASS I DIV. 1, GR. C,D; CLASS II, DIV. 1, GR. E,F,G;
CLASS III, T6; TYPE 4X;
CLASS I ZONE 1 AEx db IIB, T6 Gb IP66
ZONE 21 AEx tb IIIC T80°C Db IP66
Ex db IIB T6 Gb; Ex tb IIIC T80°C Db; IP66

- ATEX/IECEx: II 2 G Ex db IIB T6 Gb; IP66
II 2 D Ex tb IIIC T80°C Db; IP66

COMMUNICATION PORT

MODEL **HIT-4-(__)-(__)-(__)-(__)-(__)-(__)-(__)-(I)-(__)**

OPTION **(I)**

(T)* INTERNAL TERMINAL BLOCK
RS485/MODBUS, DATA LOGGING, CONFIGURATION AND MONITORING
RECOMMENDED FOR PERMANENT FIELD CONNECTION TO HIT-4X
ALL ENCLOSURES

(U)* EXTERNAL USB STYLE CONNECTOR
RS485/MODBUS FOR DATA LOGGING/CONFIGURATION
NEMA 4X ENCLOSURE ONLY

(X) NONE

SPECIAL FEATURES

MODEL **HIT-4(__)-(__)-(__)-(__)-(__)-(__)-(__)-(__)-(__)-(J)**

OPTION **(J)**

CE) CE MARK REQUIRED FOR EUROPE

(SP) ANY SPECIAL FEATURES THAT ARE NOT COVERED IN THE MODEL NUMBER USE A WRITTEN DESCRIPTION OF THE -SP.

(X) NO SPECIAL FEATURES

2. FEATURES AND SPECIFICATIONS

- LCD display for Total, Rate, Temperature and Pressure
- Non-resettable Grand Total
- Full front panel operation with magnetic pointer via Ex enclosure
- Up to 20-Point Linearization to correct for flowmeter non-linearity
- 4-20mA analog output proportional to flow rate
- Optional Scaled Pulse Output representing an incremental total volume
- Alarm Output with dual set point configurable for Rate or Total
- Magnetically operated switch for Total reset
- Internal battery pack backup
- Configuration and Grand Total stored in non-volatile memory. Total and Grand Total saved when pressing ►button.
- Data Logging: Hourly Total, Daily Total, Event Logs
- Modbus Communications Protocol via RS485
- Real Time Clock
- AGA-8 Compliant

2.1 General

Display:	LCD, updated every 1 seconds.
Total:	8 digits 3/8" high. Resettable using a magnet, a dry contact, from front panel keypad or via Modbus communications. Value is stored in non-volatile memory when pressing ►button.
Total Units:	GAL, LIT, FT3, ACF, ACFx1000, M3, BBL, KG, LB, NM3, SCF, SCFx1000.
Grand Total:	8 digits 3/8" high, non-resettable. Value is stored in non-volatile memory when pressing ►button. Grand Total is displayed for 7 seconds after pressing the ▲ button.
Rate:	6 digits 1/2" high.
Rate Units:	/SEC, /MIN, /HR, /DAY
K-factor:	The pulses per unit of Total (e.g. pulses/gallon) are configurable in the range 0.001 to 9,999,999.
Linearization:	2-20 points.
Decimal Points:	Decimal Point positions are configurable for 0, 0.0, 0.00, or 0.000 for rate, total and K-factor.
Accuracy:	Total and Rate: ±0.01% of reading, ±1 Count

2.2 Flowmeter Inputs

Magnetic Pickup:

Frequency Range:	0.2 Hz to 5000 Hz.
Signal Level:	30 mV_{P-P} to 30 V_{P-P}.

Opto-Isolated DC Pulse:

Frequency Range:	0 Hz to 3000 Hz.
Signal Level:	0 to +DC pulse.
Internal Pull-Up	10 kΩ to +DC
Low (Logic 0):	< 1 VDC
Min Pulse width:	0.1 msec

Contact Closure:

Frequency Range:	0 Hz to 5000 Hz
Internal Pull-up:	220 kΩ to +3.3 VDC

Reset:

Signal Type:	Contact closure
Min Time On:	25 msec
Internal Pull-up:	35 kΩ to +3.3 VDC

MCP/RF Input

2.3 Temperature and Pressure Inputs

Temperature Input:

Type:	*4-20 mA, 100Ω RTD (DIN385)
Resolution:	12 bit

Pressure Input:

Type:	*4-20 mA
Resolution:	12 bit

*4-20 mA input not available with battery power.

2.4 DC Power/Loop Powered

Voltage:	8 to 30 VDC
Current:	< 24 mA
Loop Burden:	8 VDC maximum
Supply Backup:	One C-size 3.6V Lithium battery pack for Ex systems
Protection:	Reverse polarity protected

2.5 Battery Powered Version

Battery Type:	Two C-size 3.6 lithium battery or battery pack (4xAA) for Ex systems
Battery Life:	2 years typical 1 year typical – Ex system battery pack
Protection:	Reverse polarity protected

2.6 Analog Output

Scale:	4 – 20 mA follows rate.
Accuracy:	0.02% of Full Scale @ 20ºC.
Temperature drift:	40 ppm/°C
Update Time:	0.125 seconds.
Protection:	Reverse polarity protected

2.7 Pulse Output

Type:	0-5V TTL, Open collector (30 VDC, 100 mA)
Divider:	0.01, 0.1, 1, 10, 100
Pulse Width:	Adjustable 4ms to 300ms
Max Frequency:	100Hz

2.8 Alarm Output with Dual Set Point

Type:	0-5V TTL, Open collector (30 VDC, 100 mA)
Function:	Rate or Total

2.9 Serial Port RS485

Protocol:	Modbus RTU
Function:	Data Logging, Configuration Process Monitor

2.10 Data Logging

Hourly Total Log:	768
Daily Total Log:	378
Event Log:	345
Accessing Logs:	Via Modbus communication Up to 100 latest logs are viewable on the front panel

2.11 Physical

Temperature:	Operating: -40°F (-40°C) to 158°F (70°C).
Humidity:	0 – 90% Non-condensing.
Packaging:	Explosion proof (Approx. 5"x5"x5", 3 lbs.)

3. INSTALLATION

Warning: Do not open explosion-proof enclosure while circuits are powered in hazardous locations.

Field wiring connections

All field wiring connections should be made using shielded cables. The shield should be connected to the chassis ground lug on the HIT-4G enclosure. The shield on the opposite end of the cable should be left open. Connections are made to the HIT-4G terminal blocks using wire gauges 26-16 AWG, tightening Torque 0.22 to 0.25Nm.

Accessing terminal block connections

Ex Enclosure:

1. Loosen the locking set screw using a 1/16" hex key (Allen wrench) and unscrew the cover of the enclosure counter-clockwise until it separates from the body of the enclosure.
2. Remove two #4-40 x 3/8" pan head screws from the front panel by turning counter-clockwise.
3. Lift the display assembly from the enclosure. Terminal blocks are on the bottom.

NEMA Enclosure:

1. Loosen, by turning counter-clockwise, the screws in each corner of the enclosure cover to remove.
2. Remove four #4-40 thumb screws from the front panel by turning counter-clockwise.
3. Lift the display assembly from the enclosure. Terminal blocks are on the bottom.

Making connections to terminal blocks

1. Use a small flat blade screwdriver and turn counter-clockwise to loosen the proper terminal screw.
2. Insert wire (26-16 AWG) and turn terminal screw clockwise to tighten.
3. Lightly pull on wire to ensure proper connection.

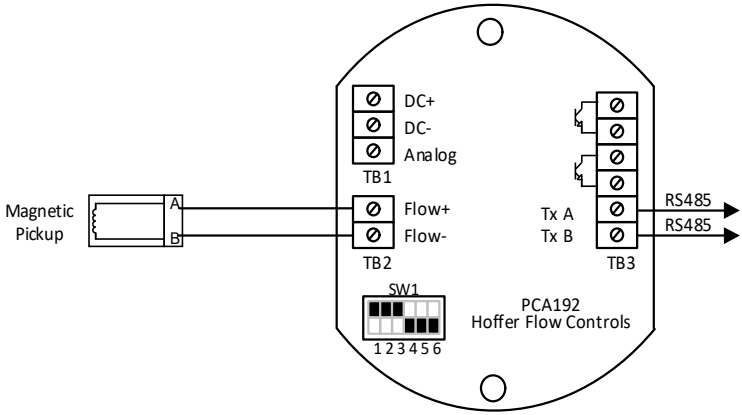

Battery Powered with Magnetic Pickup

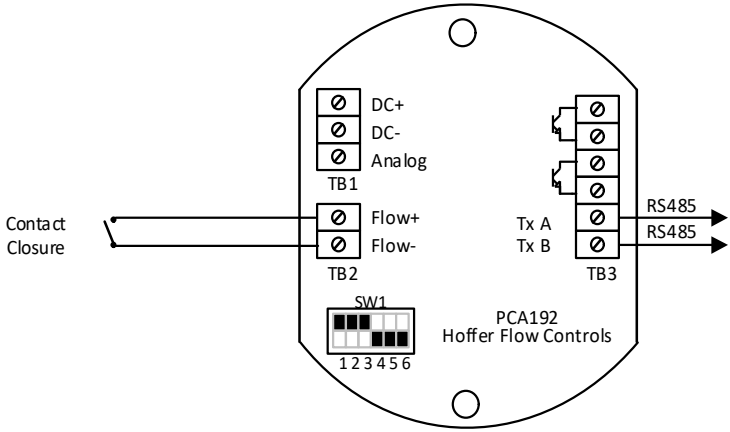

Battery Powered with Contact Closure

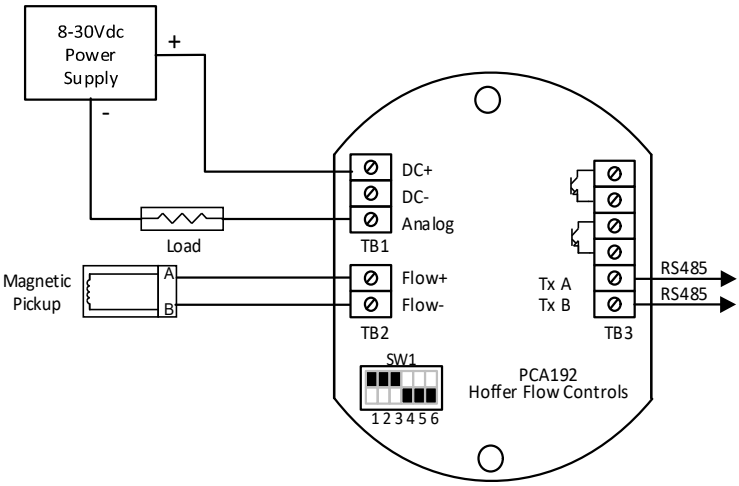

Loop Powered with Magnetic Pickup

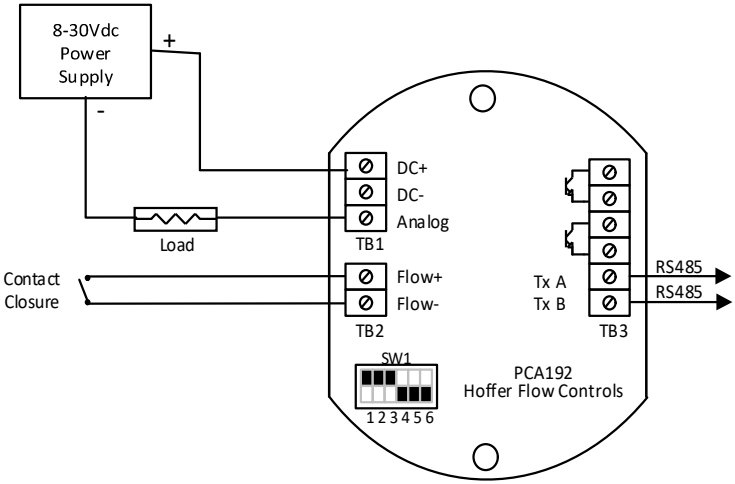

Loop Powered with Contact Closure

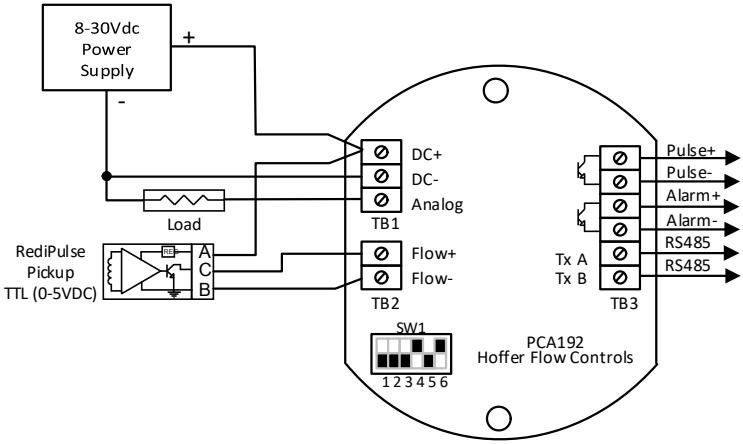

DC Powered with Analog Output and
RediPulse Pickup (**0-5V/TTL**)

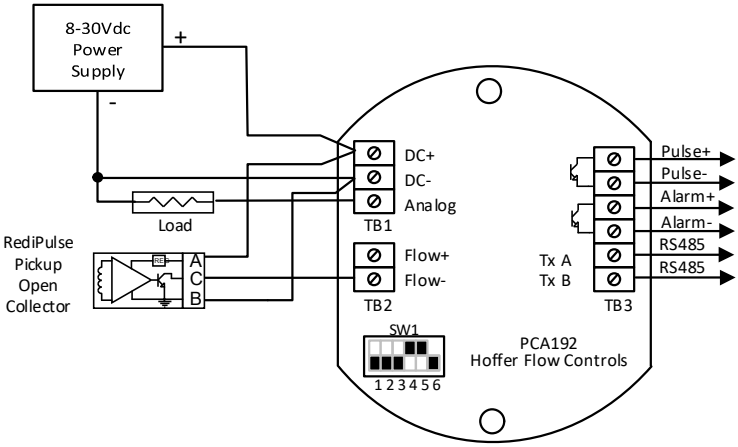

DC Powered with Analog Output and
RediPulse Pickup (**Open Collector**)

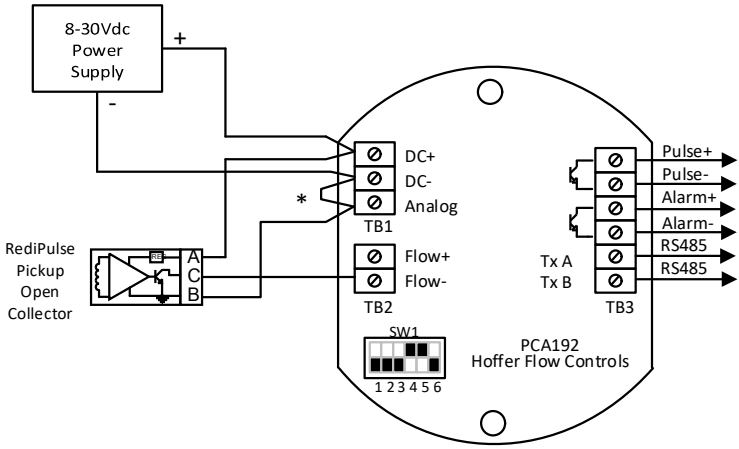

* Jumper is required if 4-20mA is not connected

DC Powered (no analog output) with
RediPulse Pickup (**Open Collector**)

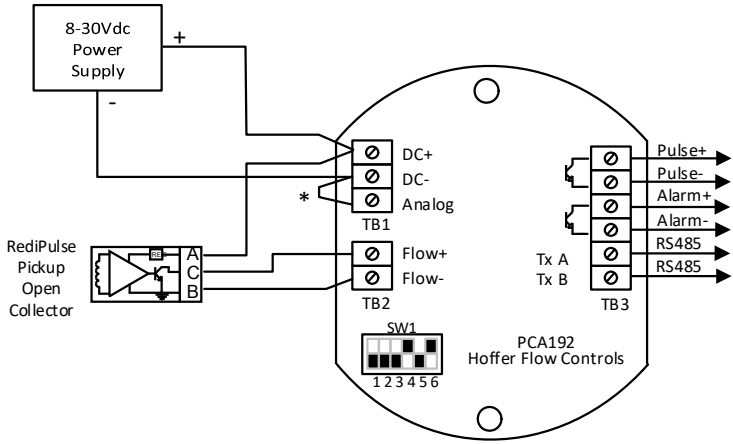

* Jumper is required if 4-20mA is not connected

DC Powered (no analog output) with
RediPulse Pickup (**TTL**)

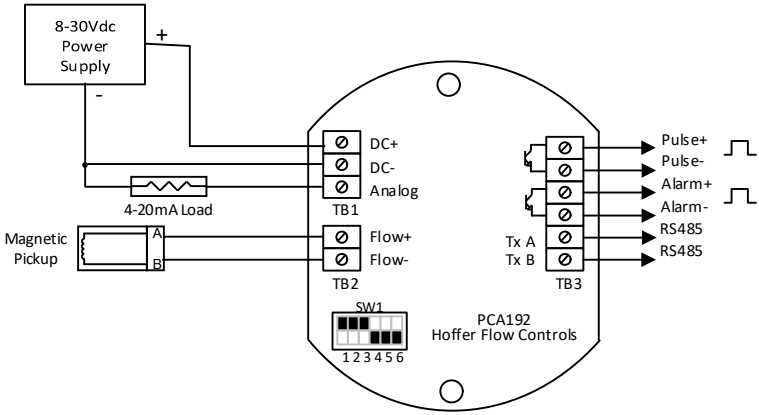

DC Powered with Analog Output
and Magnetic Pickup

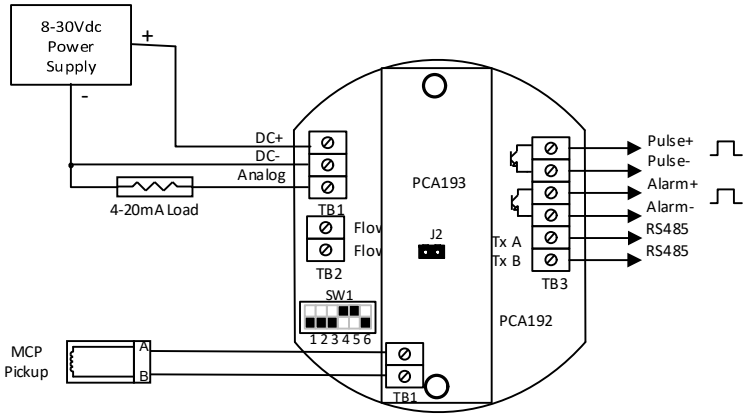

DC Powered with Analog Output
and MCP/RF Pickup

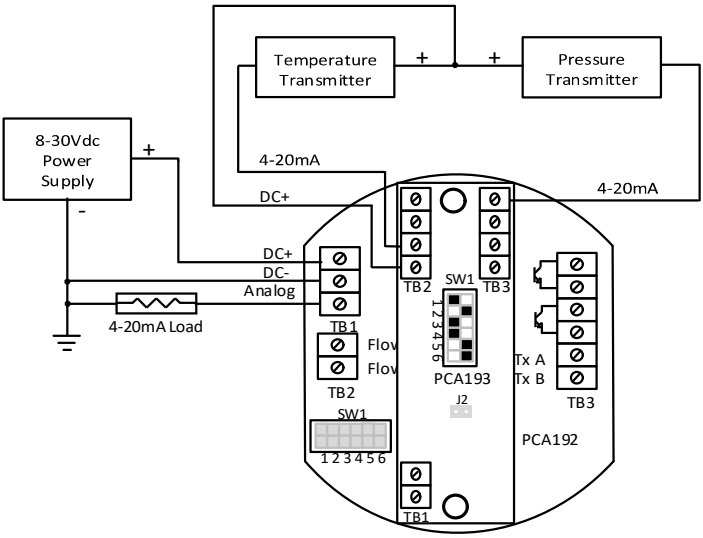

DC Powered with Temperature and Pressure Transmitters

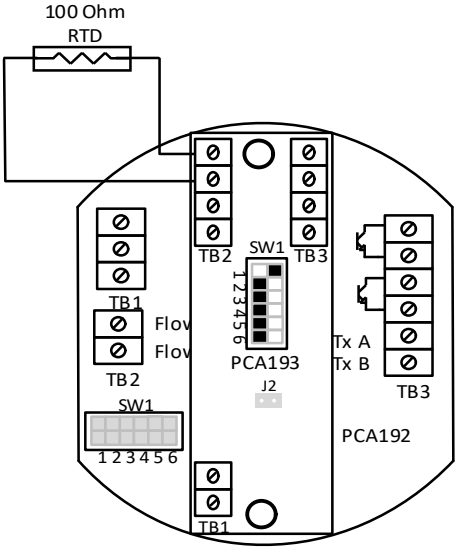

Two-Wire RTD Connection

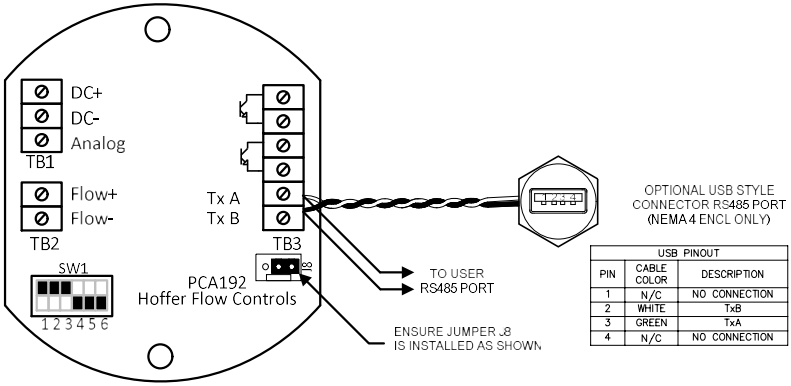

USB PINOUT

PIN	CABLE COLOR	DESCRIPTION
1	N/C	NO CONNECTION
2	WHITE	TxB
3	GREEN	TxA
4	N/C	NO CONNECTION

RS485 Communications Port Wiring

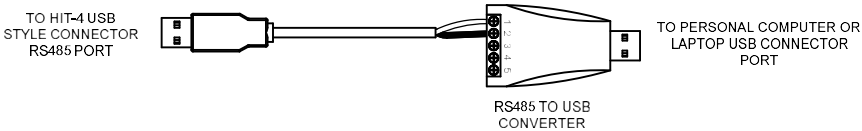

Communication Kit P/N: 800-0483

Flowmeter Input

The flowmeter input accepts a low-level sinusoidal signal from a magnetic type pickup coil, contact closure or DC pulse signal. An optional circuit board (PCA193) provides an input that will accept a signal from MCP/RF type pickups. Switches 1,2,3,4,5,6 on SW-1 must be set according to the type of pickup coil to be used.

SW-1 SWITCH SETTINGS FOR FLOWMETER INPUT OPTIONS

INPUT OPTION	PCA192 SW-1 SETTINGS	
Magnetic pickup Contact Closure	1,2,3 - ON 4,5,6 - OFF	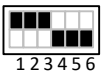
RediPulse TTL	1,2,3,5 - OFF 4,6 - ON	
RediPulse Open Collector *MCP/RF	1,2,3,6 - OFF 4,5 - ON	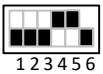

*** PCA193 is required and J2 must be equipped for MCP/RF**

3.1 4-20 mA Current Loop

When powered from a two-wire 4-20 mA current loop, a minimum supply voltage in the range of 8-30 Volts DC is required, depending on the loop load resistance. At nominal 250 Ohms loop resistance the minimum power supply is 13V.

Backup batteries are included to ensure that volume accumulation will not be interrupted during a power failure.

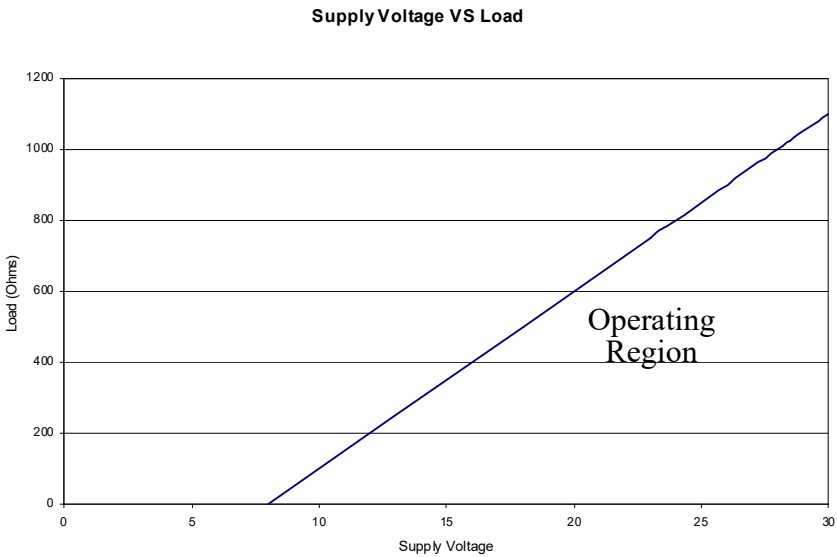

The HIT-4G outputs a 4-20mA analog signal that is proportional to the calculated flow rate. The 4mA and 20mA settings referred to as OUT LO and OUT HI respectively, may be configured from the front panel of the instrument or via Modbus communications.

3.2 Analog Output Update Time

The displayed Rate and Total are updated once per second. The analog output update time is 1/8 seconds. It takes about .25sec. to reach steady state due to a change in the input.

When flow stops the time for the display to reach 0 and for the analog output to return to 4 mA is between 0.25 and 8 seconds, depending on the Sample Time setting (SMPL T). With the default setting the time is 0.25 seconds.

Changing the SMPL T is only recommended for low flow applications where the input frequency is below 1 Hz. See Chapter 4 for more information on Sample Time.

3.3 Pulse Output

HIT-4G provides an optional Pulse Output factory configured for turbine raw frequency or scaled pulse. The scaled pulse outputs one pulse for the least significant digit of the displayed total. A scaling factor of 0.01, 0.1, 1, 10 or 100 is available to reduce or increase the resolution of the pulse output. For example, if the Total Decimal Point is set to 0000000.0, and the Pulse Scale is 1, then 1 pulse will be output for each tenth (0.1) of a unit of measure. Changing the Pulse Scale to 10, would result in an output pulse for each 1.0 unit of measure. The output must be scaled so that the pulse frequency does not exceed 100Hz at the maximum flow rate.

The pulse width can be configured between 4 and 300ms.

The Pulse Output may be configured as an Open Collector by removing J9 or 0-5V (TTL/CMOS) by installing J9.

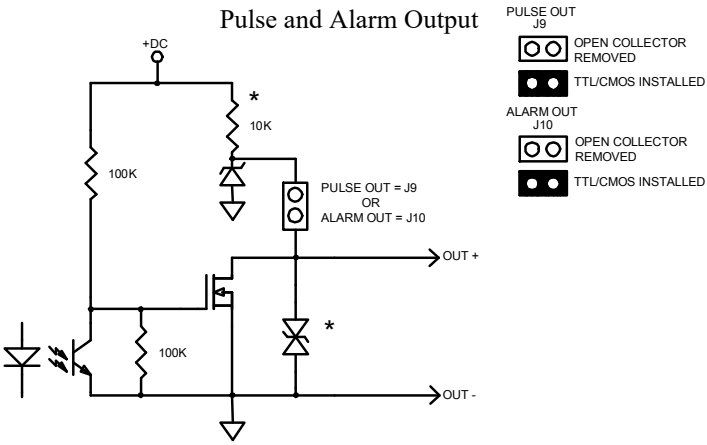

3.4 Alarm Output

HIT-4G provides an optional Alarm Output configurable for Rate or Total. The Alarm Output can be configured as Low Alarm, High Alarm or Low/High.

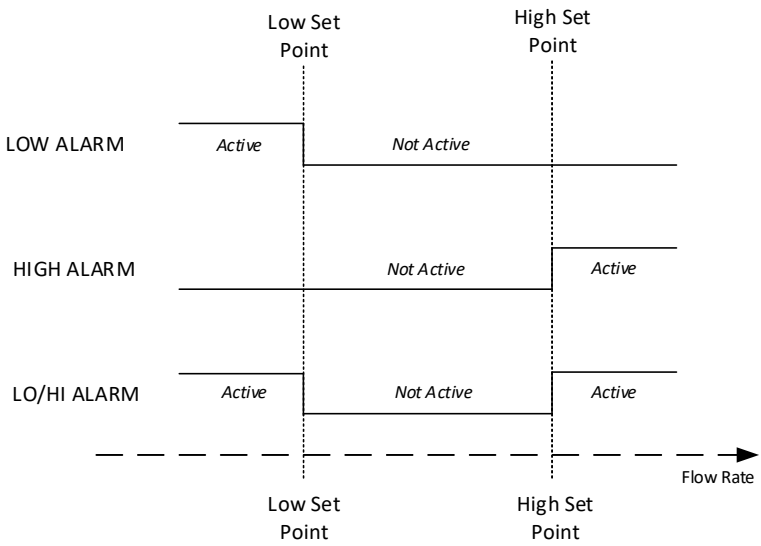

Alarm Active – Output transistor is in OFF state
Alarm Not Active – Output transistor is in ON state

The Alarm Output may be configured as an Open Collector by removing J10 or 0-5V (TTL/CMOS) by installing J10.

3.5 Temperature and Pressure Inputs

HIT-4G provides inputs for temperature and pressure using an add-on printed circuit board PCA193. SW1 on PCA193 must be properly set according to the type of input being used.

INPUT OPTION	PCA193 SW-1 SETTINGS	
Temperature Transmitter	2 - ON 1 - OFF	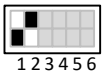
RTD	1 - ON 2 - OFF	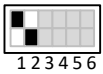
Pressure Transmitter	5, 6 - ON 3, 4 - OFF	

This page intentionally left blank

4. CONFIGURATION

The HIT-4G may be configured locally from the front panel, or remotely using Hoffer HIT-4 Communication program or a Modbus master. Front panel configuration may be done with magnetic pointer through the glass cover, or pressing front panel keys when cover is off. Do not remove cover in hazardous locations!

4.1 Local Configuration

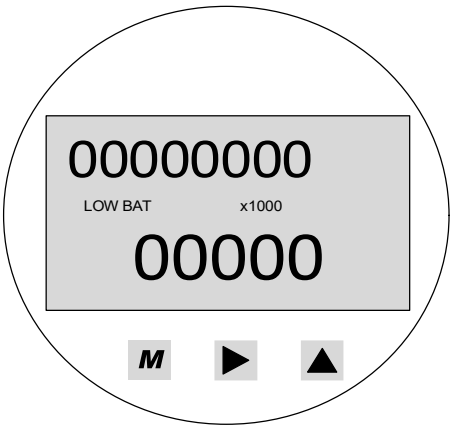

M
- Enters Configuration Mode
- Steps through each menu item.
- Accepts entry when editing numeric values.

▶
- Saves Totals in Operate Mode
- Scrolls through Menu Group
- Scrolls though all values for each menu item.
- Moves to the next digit to the right when editing numeric values.

▲
- Displays Grand Total, Temperature and Pressure in Operate Mode Operate
- Returns to Operate Mode from Menu Group level.
- Returns to Menu Group level from sub level menu.
- Increments digit when editing numeric values.

Examples of configuration steps to Clear Total, Set Total, and displaying software version:

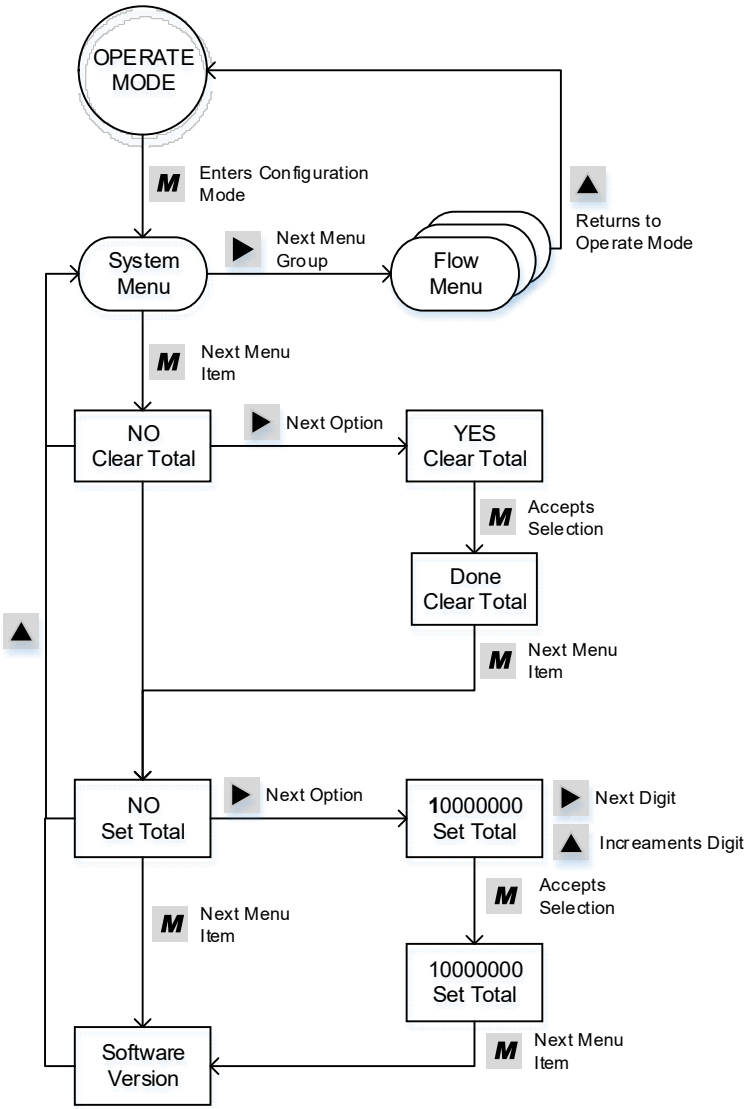

Configuration Menu Chart

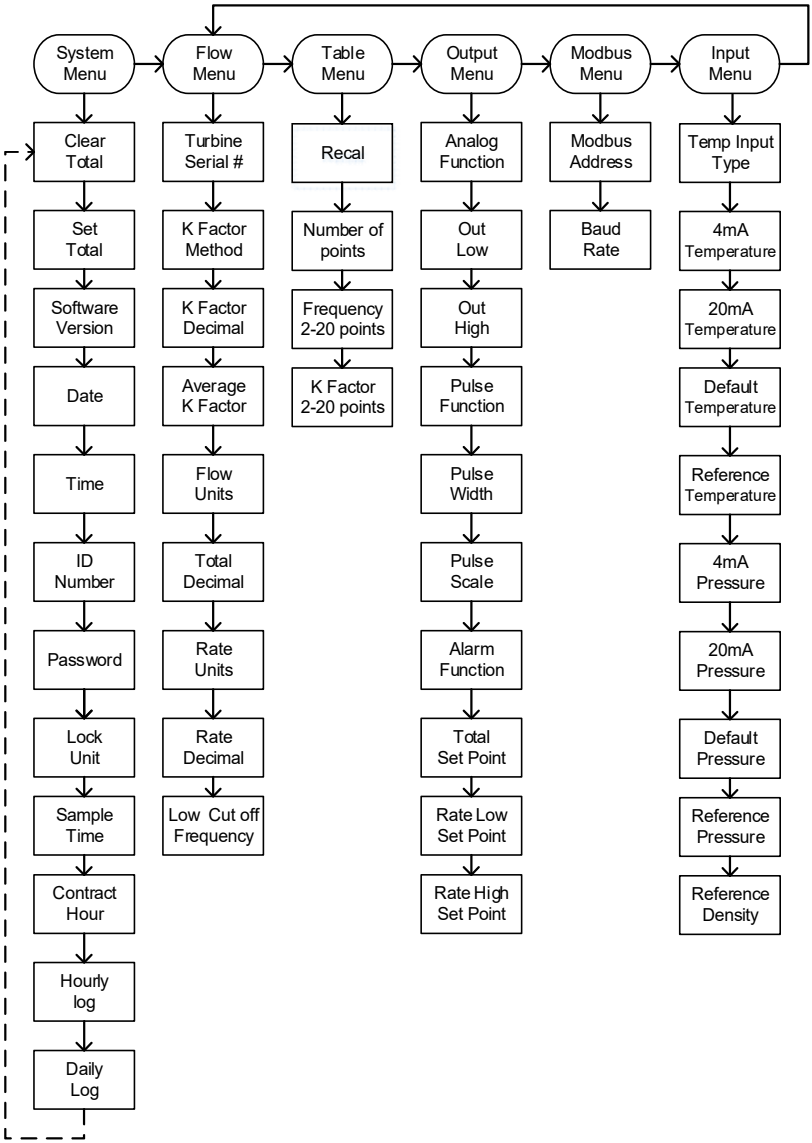

Configuration Fields Description

SYSTEM MENU

Menu Item	Description	Options	Min Max Value	Default
CLEAR	Clear Total and save new value (0) to EEPROM. Grand Total is non-resettable.	NO YES	N/A	NO
SETTOT	Set Total and save to EEPROM.	Numeric Entry	0 99999999	0
SW VER	Read-only displays HIT-4G software version.	N/a	N/A	N/A
DATE	Current Date (mm-dd-yy)	mm-dd-yy	N/A	01-01-10
TIME	Current time in 24-hour format.	hh-mm-ss	N/A	23-00-00
ID NUM	HIT-4G Serial Number	Numeric Entry	0 99999999	1234567
PASSWD	Password	0000 – 9999	0000 9999	1234
LOCK	Password protected	NO (0) YES (1)	N/A	NO
SMPL T	Sample Time	1-80	1 80 (8 sec.)	1
CONTHR	Contract Hour for daily logs	1-24	1	1 (1 AM)
HR LOG	Displays Hourly Logs	Incremental Scroll ▶	1 (previous hour) 99	0 (current)
DAYLOG	Displays Daily Logs	Incremental Scroll ▶	1 (yesterday) 99	0 (current)

FLOW MENU

Menu Item	Description	Options	Min Max Value	Default
TURBIN	Turbine serial #	Numeric Entry	0000000 9999999	1234567
K FACT	K Factor Method	Average Table	N/A	Average
KFAC D	The number of decimal places for the K-Factor. For Average K and K Factors in table.	0 0.0 0.00 0.000	N/A	0.000
AVG K	Average K Factor	Numeric Entry	0.001 9999999.9	1.000
C FACT	Flow and total multiplier	Numeric Entry	0.001 99999.999	1.000
UNITS	Units of measure for flow. LB, KG, SCF, SCFx1000, and NM3 have K-Factors adjusted at fixed temperature and pressure	Gallons Barrels Liters LB KG ACF ACFx1000 SCF SCFx1000 M3 NM3	N/A	Gallons
TOTL D	Total Decimal Point	0 0.0 0.00 0.000	N/A	0.0
RATE	Time base for flow rate.	/sec /min /hour /day	N/A	/sec
RATE D	Rate Decimal Point	0 0.0 0.00 0.000	N/A	0.0
CUTOFF	Low flow frequency cutoff threshold in Hz.	Numeric Entry	0.000 100.000	0.000

TABLE MENU

Menu Item	Description	Options	Min Max Value	Default
RECAL	Restores K-Factor table to factory default values to allow entry of new calibration data.	NO YES	N/A	NO
POINTS	Number of points	2-20	2 20	10
FR 01	Frequency points 2 – 20. Follow monotonic and separation rules.	Numeric Entry	0.001 5000.000	Fr20 = 5000.000 Fr19= 4999.999 Fr18 =49999.998 ETC.
K 01	K factor points 2 - 20	Numeric Entry	0.001 9999999.9	1.000

MODBUS MENU

Menu Item	Description	Options	Min Max Value	Default
ADDRSS	Modbus address	Numeric entry	000-254	
BAUD	Baud rate for RS485	9600 *57600 *115200	N/A	9600

*Not currently supported.

OUTPUT MENU

Menu Item	Description	Options	Min Max Value	Default
ANALOG	Analog Out Function.	OFF RATE 4mA 12mA 20mA	N/A	OFF
OUT LO	4 mA setting in units selected for Total . OUT LO must be < OUT HI.	Numeric Entry	0.000 999998	0.000
OUT HI	20 mA setting in units selected for Total. OUT HI must be > OUT LO.	Numeric Entry	0.001 999999	100.000
PULSE	Pulse Function	OFF ON TEST	N/A	OFF
WIDTH	Pulse width in mS	Numeric Entry	4 ms 300 ms	4 ms
SCALE	Pulse Scale. This factor represents the number of output pulses per least significant digit of displayed total determined by the total decimal selection.	0.01 0.1 1 10 100	N/A	1
ALARM	Alarm function.	OFF RATE LO RATE HI RATE LOHI TOTAL TEST	N/A	OFF
TOTSET	Total alarm set point.	Numeric Entry	0.001 9999999	1000.00
LO SET	Rate alarm low set point.	Numeric Entry	0 999999	10.00
HI SET	Rate alarm high set point.	Numeric Entry	0 999999	100.00

INPUT MENU

Menu Item	Description	Options	Min Max Value	Default
TYPE T	Temperature Input Type	RTD 4-20mA	N/A	4-20mA
MIN T	4 mA Temperature	Numeric Entry	-450 F 999 F	0 F
MAX T	20 mA Temperature	Numeric Entry	-449 F 1000 F	100 F
DEF T	Default Temperature	Numeric Entry	-450 F 1000 F	68 F
REF T	Reference Temperature	Numeric Entry	-450 F 1000 F	68 F
MIN P	4 mA Pressure	Numeric Entry	0 psia 49999 psia	0 psia
MAX P	20 mA Pressure	Numeric Entry	1 psia 50000 psia	500 psia
DEF P	Default Pressure	Numeric Entry	0 psia 50000 psia	500 psia
REF P	Reference Pressure	Numeric Entry	0 psia 50000 psia	14.696 psia
REF D	Reference Density	Numeric Entry	0.0001 lb/ft3 100 lb/ft3	1.0 lb/ft3
REF Z	Reference Compressibility	Numeric Entry	0.0001 2.000	1.0

4.2 Default Configuration

HIT-4G is fully configured by the factory prior to shipment. When the instrument is purchased with a Hoffer Flowmeter or when calibration and configuration data are supplied, the instrument is configured as specified. When calibration or configuration data is not available, the instrument is shipped with default values. Refer to the above table for a listing of the HIT-4G factory default configuration.

5. OPERATION

5.1 Front Panel

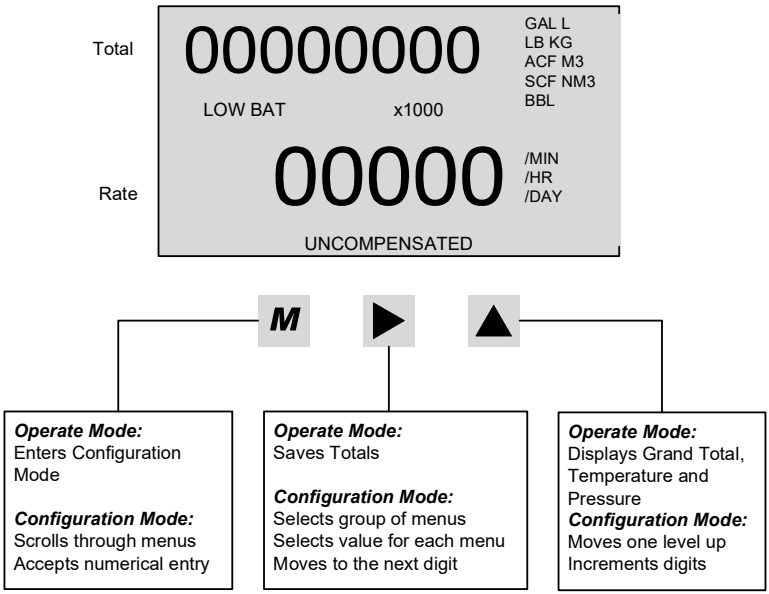

The HIT-4G displays flow total and flow rate on a two-line liquid crystal display (LCD). The display is updated once per second. The 8-digit non-resettable Grand Total, Temperature and Pressure can be viewed on the top line by pressing the ▲ key.

5.2 Saving Total

Total and Grand Total can be saved at any time by pressing ► button. When changing the battery (see section 5.6 Battery Replacement), it is recommended to stop the flow and save Total prior to removing power from the unit.

5.3 Clearing the Total

The Flow Total may be cleared by using a magnetic pointer, a contact closure to power common on the RESET input terminal, from the front panel key, or via Modbus communications (See Chapter 6 Modbus Communications).

To clear the total using a magnetic pointer, slide the magnet slowly across the HIT-4 model name at the top of the front panel overlay.

To reset the total from the front panel keypad, use the following key sequence:

Press **M**	`SYSTEM MENU` is displayed
Press **M**	`CLEAR NO` is displayed
Press ▶	`CLEAR YES` is displayed
Press M	`CLEAR DONE` is displayed
Press ▲	To return to `SYSTEM MENU`
Press ▲	To return to operating mode

5.4 Displaying Logs

HIT-4G records up to 768 hourly logs, 378 daily logs and 345 event logs. Data logs can be red via Modbus. The newest 99 Hourly and Daily logs can be displayed on the front panel by accessing the Log Menu. Event logs can be read only via Modbus.

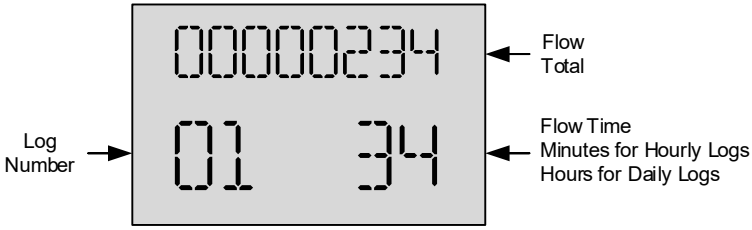

Logs Screen

To access Hourly Logs

Press M 12 times	HR LOG is displayed
Press ▶	The last recorded log is displayed
Press ▶	Previous log is displayed
Press ▲	To return to SYSTEM MENU
Press ▲	To return to operating mode

To access Daily Logs

Press M 13 times	DAY LOG is displayed
Press ▶	The last recorded log is displayed
Press ▶	Previous log is displayed
Press ▲	To return to SYSTEM MENU
Press ▲	To return to operating mode

5.5 Fault Conditions

The HIT-4G detects numerous system faults and sends error message via Modbus. (Refer to chapter 6. Modbus Communications.)

5.6 Battery Replacement

The HIT-4G monitors the battery voltage and displays LOW BAT on the LCD when the battery is approaching the end of its life (3V).

The Total and Grand Total are **NOT** saved automatically when power is removed from the HIT-4G.

When changing the battery, it is recommended to stop the flow and save Total prior to removing power from the unit.

This page intentionally left blank

6. MODBUS COMMUNICATIONS

HIT Com Software or a Modbus Master may be used to configure HIT-4G, monitor process variables and obtain diagnostic information from the HIT-4G.

Supported Commands

Function Code (Hex)	Description
03	Read holding registers
05	Preset Boolean (for Enron event record acknowledgement
10	Write Commands

Data Types

Data Type	Byte Count	Register Count
Unsigned Int (U16)	2	1
Unsigned Int (U32)	4	1
Floating Point (FP32)	4	*1 or 2
Double Precision Float (FP64)	8	*1 or 4

* The variables Rate, Total, Grand Total, Temperature, Pressure and Compressibility are available as single 32 or 64-bit registers as well as multiple 16-bit registers.

Registers
Each register is labeled as Read Only (RO) or Read/Write (R/W) according to access type.

Register (Decimal)	Description	Data Type	Access	Notes
1	Clear Event Logs	U16	RO	
3	Clear Hourly Logs	U16	RO	
5	Clear Daily Logs	U16	RO	
7	Clear Grand Total	U16	RO	
9	Clear Total	U16	RO	Send a read request to this register to clear Total
32	Request Event Logs	U16 (2) FP32 (4)	RO	

Register (Decimal)	Description	Data Type	Access	Notes
700	Request Hourly Logs	FP32 (4)	RO	
701	Request Daily Logs	FP32 (4)	RO	
1002	Software Version	FP32	RO	
1003	Device Type	U16	RO	0=4U, 1=4G, 2=4L
1005	Turbine Serial Number	U32	R/W	1 – 99999999
1006	Electronic ID Number	U32	R/W	1 – 99999999
1007	Password	U16	R/W	0000-9999
1008	Lock Unit	U16	R/W	0=No, 1=Yes
1009	Slave Address	U16	R/W	0-253
1010	Baud Rate	U16	R/W	0 = 9600, 1 = 57000, 2 = 115200
1011	Sample Time	U16	R/W	1-80
1013	Contract Hour	U16	R/W	1-24
1200	Year	U16	R/W	0-99
1201	Month	U16	R/W	1-12
1202	Day	U16	R/W	1-31
1203	Hour	U16	R/W	1-24
1204	Minute	U16	R/W	0-59
1205	Second	U16	R/W	0-59
2000	Total Units	U16	R/W	0=gal, 1=bbl, 2=L, 3=lb, 4=kg, 5=acf, 6=acfx1000, 7=scf, 8=scfx1000, 9=m3, 10=nm3
2001	Total Decimal Point	U16	R/W	0-3
2003	Rate Time Base	U16	R/W	0=sec, 1=min, 2=hr, 3=day

Register (Decimal)	Description	Data Type	Access	Notes
2004	Rate Decimal Point	U16	R/W	0-3
2005	K-Factor Method	U16	R/W	0=Average, 1=Linear
2006	Average K-Factor	FP32	R/W	0.001-9999999
2007	Low Frequency Cutoff	U16	R/W	0-100 Hz
2008	K-Factor Number of Points	U16	R/W	2-20
2010	K-Factor Decimal Point	U16	R/W	0-3
2011	Frequency 1	FP32	R/W	0.001-5000.000
2013	Frequency 2	FP32	R/W	0.001-5000.000
2015	Frequency 3	FP32	R/W	0.001-5000.000
2017	Frequency 4	FP32	R/W	0.001-5000.000
2019	Frequency 5	FP32	R/W	0.001-5000.000
2021	Frequency 6	FP32	R/W	0.001-5000.000
2023	Frequency 7	FP32	R/W	0.001-5000.000
2025	Frequency 8	FP32	R/W	0.001-5000.000
2027	Frequency 9	FP32	R/W	0.001-5000.000
2029	Frequency 10	FP32	R/W	0.001-5000.000
2031	Frequency 11	FP32	R/W	0.001-5000.000
2033	Frequency 12	FP32	R/W	0.001-5000.000
2035	K-Factor 1	FP32	R/W	0.001-9999999
2037	K-Factor 2	FP32	R/W	0.001-9999999
2039	K-Factor 3	FP32	R/W	0.001-9999999
2041	K-Factor 4	FP32	R/W	0.001-9999999
2043	K-Factor 5	FP32	R/W	0.001-9999999
2045	K-Factor 6	FP32	R/W	0.001-9999999
2047	K-Factor 7	FP32	R/W	0.001-9999999
2049	K-Factor 8	FP32	R/W	0.001-9999999
2051	K-Factor 9	FP32	R/W	0.001-9999999
2053	K-Factor 10	FP32	R/W	0.001-9999999
2055	K-Factor 11	FP32	R/W	0.001-9999999
2057	K-Factor 12	FP32	R/W	0.001-9999999
2059	Frequency 13	FP32	R/W	0.001-5000.000
2061	Frequency 14	FP32	R/W	0.001-5000.000
2063	Frequency 15	FP32	R/W	0.001-5000.000
2065	Frequency 16	FP32	R/W	0.001-5000.000
2067	Frequency 17	FP32	R/W	0.001-5000.000

Register (Decimal)	Description	Data Type	Access	Notes
2069	Frequency 18	FP32	R/W	0.001-5000.000
2071	Frequency 19	FP32	R/W	0.001-5000.000
2073	Frequency 20	FP32	R/W	0.001-5000.000
2075	K-Factor 13	FP32	R/W	0.001-9999999
2077	K-Factor 14	FP32	R/W	0.001-9999999
2079	K-Factor 15	FP32	R/W	0.001-9999999
2081	K-Factor 16	FP32	R/W	0.001-9999999
2083	K-Factor 17	FP32	R/W	0.001-9999999
2085	K-Factor 18	FP32	R/W	0.001-9999999
2087	K-Factor 19	FP32	R/W	0.001-9999999
2089	K-Factor 20	FP32	R/W	0.001-9999999
4000	Pulse Function	U16	R/W	0=off, 1=on, 2=test
4001	Pulse Width (mS)	U16	R/W	4-300mS
4003	Pulse Scale	U16	R/W	0=0.01, 1=0.1, 2=1, 3=10, 4=100
4005	Analog Out Function	U16	R/W	0=off, 1=rate, 2=4mA, 3=12mA, 4=20mA
4007	Analog Out Low	FP32	R/W	0.000-999998
4009	Analog Out High	FP32	R/W	0.001-999999
4011	Alarm Function	U16	R/W	0=off, 1=rate lo, 2=rate hi 3=rat lohi, 4=total, 5=test
4012	Total Alarm Set Point	FP64	R/W	0.001-99999999
4013	Rate Alarm Low Set Point	FP32	R/W	0.001- Max limited by rate decimal point selection: 999.999, 9999.99, 99999.9, 99999
4014	Rate Alarm High Set Point	FP32	R/W	0.001- Max limited by rate decimal point selection: 999.999, 9999.99, 99999.9, 99999

7000	Request Hourly Log Pointer	FP32	RO	-1 (cleared logs) - 767
7001	Request Daily Log Pointer	FP32	RO	-1 (cleared logs) - 383

Register (Decimal)	Description	Data Type	Access	Notes
7002	Request Event Log Pointer	FP32	RO	0-344
7003	Request Date	FP32	RO	010100 - 123199
7004	Request Time	FP32	RO	000000 - 235959
7005	Request Grand Total	FP64	RO	0 – 99999999 **16-bit registers available at address 7056-7059 (FP64) and 7062-7063 (FP32)**
7006	Request Rate	FP32	RO	0 – Max limited by rate decimal point selection: 999.999, 9999.99, 99999.9, 99999 **16-bit registers available at address 7050-7051**
7007	Request Daily Total	FP64	RO	0 – 99999999
7008	Request Daily Run Time Seconds	FP32	RO	0 – 86400
7009	Request Hourly Total	FP64	RO	0 – 99999999
7010	Request Hourly Run Time Seconds	FP32	RO	0 – 3600
7011	Request Current Total	FP64	R/W	0 – Max limited by total decimal point selection: 99999.999, 999999.99, 9999999.9, 99999999. This register is also used to clear total by writing 0 or set total by writing desired value. **16-bit registers available at address 7052-7055 (FP64) and 7060-7061 (FP32)**

Register (Decimal)	Description	Data Type	Access	Notes
7013	Request Previous Day Total	FP64	RO	0 – 99999999
7014	Request Previous Day Run Time Seconds	FP32	RO	0 – 86400
7015	Request Previous Hour Total	FP64	RO	0 – 99999999
7016	Request Previous Hour Run Time Seconds	FP32	RO	0 - 3600
7018	Request Hourly Download Pointer	FP32	RO	-1 (cleared logs) - 767
7019	Request Daily Download Pointer	FP32	RO	-1 (cleared logs) - 383
7020	Request Event Log Download Pointer	FP32	R/W	-1 (cleared logs) – 344 (To increment by one, use function code 5)
7022	Fault History	U32	RO	Fault has occurred since last power on. Each bit represents a specific fault defined below.
7023	Active Faults	U32	RO	Fault is currently active. Each bit represents a specific fault defined below.
7050-7051	Request Rate	FP32	RO	Rate stored in two 16-bit registers
7052-7055	Request Current Total	FP64	RO	Current Total stored in four 16-bit registers Total is reset by sending a read request to register 9.
7056-7059	Request Grand Total	FP64	RO	Grand Total stored in four 16-bit registers

Register (Decimal)	Description	Data Type	Access	Notes
7060-7061 *	Request Current Total	FP32	RO	Current Total stored in two 16-bit registers Total is reset by sending a read request to register 9.
7062-7063 *	Request Grand Total	FP32	RO	Grand Total stored in two 16-bit registers
8000	Temperature Input Min (4 mA)	FP32	R/W	-450 F – 999 F
8001	Temperature Input Max (20 mA)	FP32	R/W	-449 F – 1000 F
8002	Temperature Default	FP32	R/W	-450 F – 1000 F
8003	Temperature Reference	FP32	R/W	-450 F – 1000 F
8004	Pressure Input Min (4 mA)	FP32	R/W	0 psia – 49999 psia
8005	Pressure Input Max (20 mA)	FP32	R/W	1 psia – 50000 psia
8006	Pressure Default	FP32	R/W	0 psia – 50000 psia
8007	Pressure Reference	FP32	R/W	0 psia – 50000 psia
8011	Density Reference	FP32	R/W	0.0001 – 100.000
8012	Compressibility Reference	FP32	R/W	0.0001 – 2.0
8013	Compressibility Method	U16	R/W	0= Default Z 1 = Z Table
8014	Default Z	FP32	R/W	0.0001 – 2.0
8015	Temperature Input Source	U16	R/W	0= RTD 1=Transmitter
8016	Calibrate RTD Low	U16	R/W	Write 5000 to calibrate Read for A/D counts
8017	Calibrate RTD High	U16	R/W	Write 5000 to calibrate Read for A/D counts
8020	Request Flow Temperature	FP32	RO	Flowing Temperature

Register (Decimal)	Description	Data Type	Access	Notes
8025	Calibrate Temp Low	U16	R/W	Write 5000 to calibrate Read for A/D counts
8026	Calibrate Temp High	U16	R/W	Write 5000 to calibrate Read for A/D counts
8027	Calibrate Press Low	U16	R/W	Write 5000 to calibrate Read for A/D counts
8028	Calibrate Press High	U16	R/W	Write 5000 to calibrate Read for A/D counts
8029	Temperature Units	U16	R/W	0 == Fahrenheit; 1 == Celsius
8030	Pressure Units	U16	R/W	0 = PSIA, 1 = bar-a, 2 = PSIG, 3 = bar-g
8031	Density Units	U16	R/W	0 = lb/ft3; 1 = kg/m3
8038-39 †	Request Flow Temperature (16-bit)	FP32	RO	Flowing Temperature in two consecutive 16-bit registers
8042-43 †	Request Flow Pressure (16-bit)	FP32	RO	Flowing Pressure in two consecutive 16-bit registers
8046-47 †	Request Flow Compressibility (16-bit)	FP32	RO	Flowing Compressibility in two consecutive 16-bit registers

* The Total and Grand Total values are available in 3 formats: 64-bit in a single register, 64-bit in four consecutive 16-bit registers and 32-bit in two consecutive 16-bit registers. The 64-bit format is recommended for greater precision, especially with values greater than 7-digits.

† Temperature, Pressure and Compressibility are available in 16-bit registers in firmware versions 1.020421 and later.

Fault Codes

The following table defines each bit for the fault codes returned when polling register 7022 and 7023 using function code 03. When a value of 1 is returned for a bit, it indicates that the fault has occurred since last power on (7022) or is currently active (7023).

Bit	Fault
0	Reset, brownout
1	Reset, reset pin
2	Reset, DoBOR
3	Reset, wakeup from LPM5
4	Reset, security violation
5	Reset, supply voltage supervisor low
6	Reset, supply voltage supervisor high
7	Reset, supply voltage monitor low
8	Reset, supply voltage monitor high
9	Reset, DoPOR
10	Reset, watchdog timer timeout
11	Reset, watchdog timer key violation
12	Reset, flash key violation
13	Reset, PLL unlock
14	Reset, peripheral/configuration area fetch
15	Reset, power management key violation
16	Low battery
17	Pulse output overflow
18	Alarm, rate low
19	Alarm, rate high
20	Alarm, total
21	Flash segment 1 invalid
22	Flash segment 2 invalid
23	Maximum input frequency exceeded
24	EEPROM read error on startup
25	Code execution error
26	Flow rate exceeds 20mA setting
27	Temperature Input Fail
28	Pressure Input Fail
29	Flash Segments ZTable Invalid
30	Spare 2
31	Spare 1

This page intentionally left blank

7. HIT-4 COMMUNICATION PROGRAM

Introduction

Hoffer's HIT-4 Communication Program allows user to configure HIT-4 devices, monitor process variables, read data logs, and obtain diagnostic information from the HIT-4.

The program can be run without HIT-4 device connected to view and edit previously saved configuration files and data log files.

System Requirements

PC Windows XP, 7

Installation

Running the HIT-4 Communication Program

Connect HIT-4 device to a computer with either a RS-232 to RS-485 or USB to RS-485 converter.

HIT-4 port settings:

Baud Rate = 9600
Data Bits = 8
Stop Bits = 1
Parity = none.

The port settings are automatically selected by the program.

To start communication with the HIT-4:

1. Open the program by clicking on the HIT-4 icon on the desktop, or navigate the program file located at C:\Program Files (x86)\Hoffer Flow Controls\HIT-4 and double click on the file "Hit4Master.exe". The "Com Port" screen will appear.
2. Enter HIT-4 slave address.
3. Click on the "Connect" button to establish connection to the HIT-4.

The connection status is displayed in the lower left corner.

4. If the HIT-4 is not connected or the PC serial port is not configured correctly, the following message will appear in the Communication Log window on the right side of the screen:

   >HH:MM:SS AM OR PM: The PortName cannot be empty. Parameter name: PortName

   Shut down the software, connect the HIT-4 to the PC and launch the HIT-4 Communication Program software.

5. If only the USB to Serial cable is attached to the PC, when the "Connect" button is clicked the following error will occur:

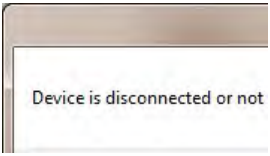

   Click "OK"; connect HIT-4 to the USB to serial cable, click on the "Disconnect" and click "Connect".

6. When communication is established with HIT-4 the Connecting to device widow will appear:

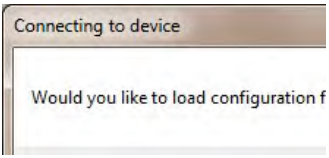

   Click "Yes" to read HIT-4 configuration information. Once the configuration has been successfully read, the following window will pop-up:

Search for Connected Devices

If multiple HIT-4 devices are daisy chained together in a network, the Auto Search feature located on the “Com Port” screen provides the ability to search for all connected devices.

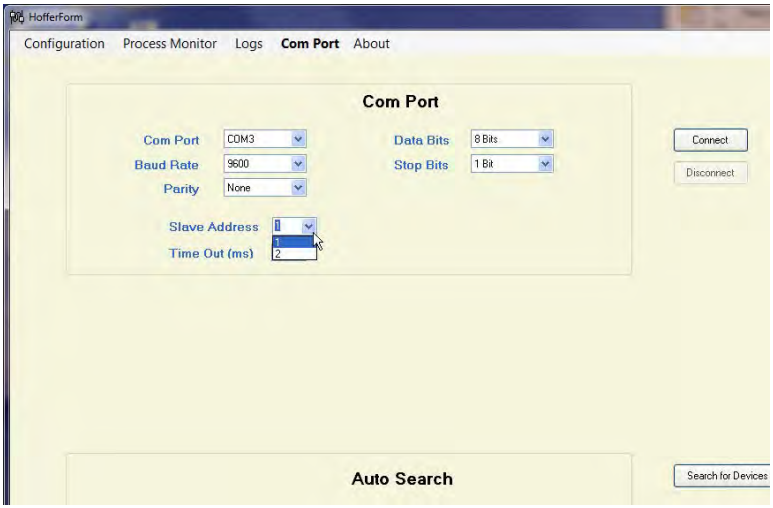

To select a device from a network perform the following:

- In the Auto Search enter a numeric value for “Start Address” and “Stop Address”.
- Click “Search for Devices”. The software will scan all addresses in the specified range and display all connect devices in the “Found Devices” field as well in the “Slave Address” drop down box.
- Select the desired device address from the “Slave Address” drop down box.
- Click on the “Connect” button to establish communication with the field device.

Configuration of the HIT-4

In order to configure the HIT-4 click on the “Configuration” menu selection that will open the “System Settings” page.

System Settings Page

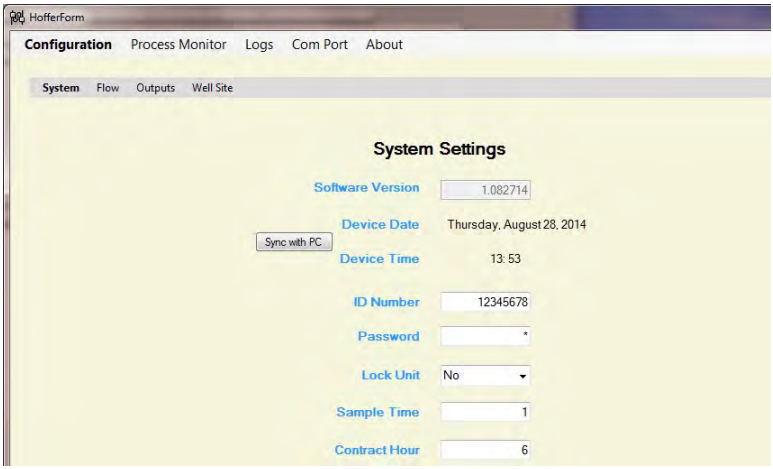

ID Number:
Enter the HIT-4 serial number. Valid entries are 0 through 99999999

Password:
Enter desired numeric password. Valid entries are 0000 through 9999.

Lock Unit:
Determines whether unit is password protected. Selection options:

No = not password protected
Yes = password protected

Sample Time:
Set maximum time to hold the display and analog output. Valid entries are 1 to 80, where 80 represents 8.0 seconds.

Contract Hour:
Determines the time when the daily log begins. Valid entries are 1 to 24.

Set Total: Set Total to user defined value. Valid entries 0 to 99999999.

Flow Settings Page

The Flow Configuration screen is used to configure all parameters related to the flowmeter calibration.

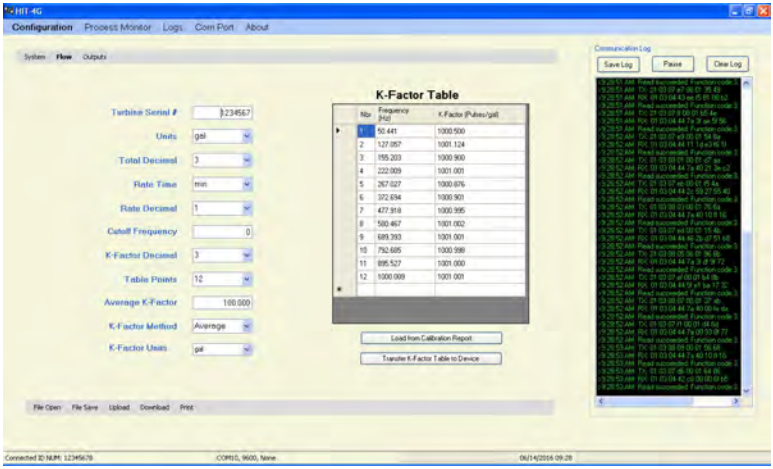

Turbine Serial #:
Numeric entry of Flowmeter serial number. Valid entries 0000000 to 9999999

Units:
Units of measure for flow. Select Gal, BBL, L, LB, KG, ACF, ACFx1000, SCF, SCFx1000, M3 and NM3.

Total Decimal:
Sets location of the Total decimal point. Select 0, 1, 2 or 3.

Rate Time:
Selects the flow rate time base. Select sec, min, hour or day.

Rate Decimal:
Sets location of the Rate decimal point. Select 0, 1, 2 or 3.

Cutoff Frequency:
The frequency cutoff threshold in Hz. The HIT-4 will ignore an input frequency that is below this user entered value. Valid entries are 0.000 to 100.000.

K-Factor Decimal:
Sets location of the K-Factor decimal point. Select 0, 1, 2 or 3.

Table Points:
Set the number of points to be used for the linearization table. Valid entries are 2 to 20.

Average K-Factor:
Enter the average flowmeter K-Factor. Valid entries are 0.001 to 9999999.9.

Correction Factor:
Enter flow and total multiplier. Valid entries are 0.001 to 99999.999.

K-Factor Method:
Select flowmeter linearization method as “Average” (single K-Factor) or “Linear” (2 to 20 point linearization table), or "Viscosity".

K-Factor Units:
The K-Factor Units selection provides a way to enter calibration data in various units of measure. The units of measure must be selected prior to entering the K-Factors. When K-Factors are written to the device, they are converted to and stored in the base units pulses/gallon. The K-Factor Units parameter is provided for convenience and is not stored in the device.

Outputs Page

The Outputs Configuration screen is used to configure the Analog, Alarm and Pulse outputs.

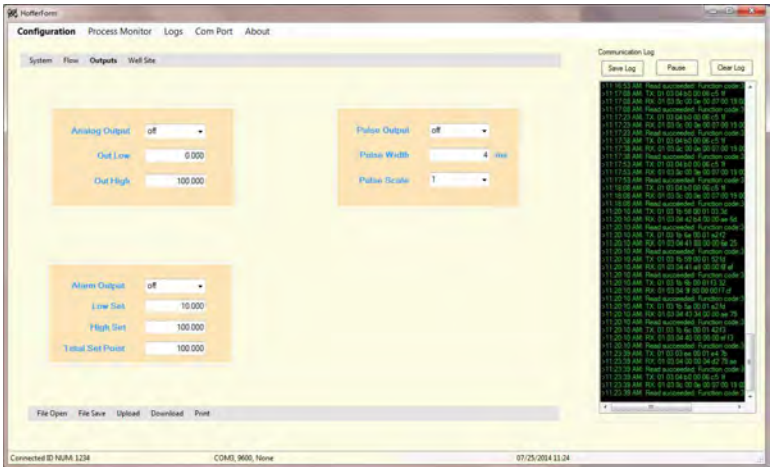

Analog Output:
Drop down menu selection:

Off: turns off analog out
Rate: turn on analog output proportional to flow rate
4mA: sets output to 4mA for diagnostic testing
12mA: sets output to 12mA for diagnostic testing
20mA: sets output to 20mA for diagnostic testing

Out Low:
Sets flow rate value for 4mA output. Valid entries 0.000 to 999998

Out High:
Sets flow rate value for 20mA output. Valid entries 0.001 to 999999

Alarm Output:
Drop down menu selection:

Off: turns off analog out
Rate_low: sets low flow alarm
Rate_high: sets high flow alarm
Rate_lohi: sets low and high flow alarm
Total: sets total alarm
Test: sets alarm output for diagnostic testing

Low Set:
Sets flow rate value for low flow alarm. Valid entries 0 to 999999. Max value is determined by Rate Decimal selection.

High set:
Sets flow rate value for high flow alarm. Valid entries 0 to 999999. Max value is determined by Rate Decimal selection.

Total Set Point:
Sets total alarm set point. Valid entries 0 to 99999999. Max value is determined by Total Decimal selection.

Pulse Output:
Drop down menu selection;

Off: turns off pulse out
On turns on pulse out
Test: outputs a test frequency of 1Hz, 50% duty cycle

Pulse Width:
Sets the pulse width in mS. Valid entries 4mS to 300mS.

Pulse Scale:
Pulse scaling that represents the number of output pulses per least significant digit of displayed total determined by the total decimal selection. Valid entries 0.01, 0.1, 1, 10 and 100.

Inputs Page

The Inputs Configuration screen is used to configure the Temperature and Pressure inputs and select the Reference Temperature and Reference Pressure.

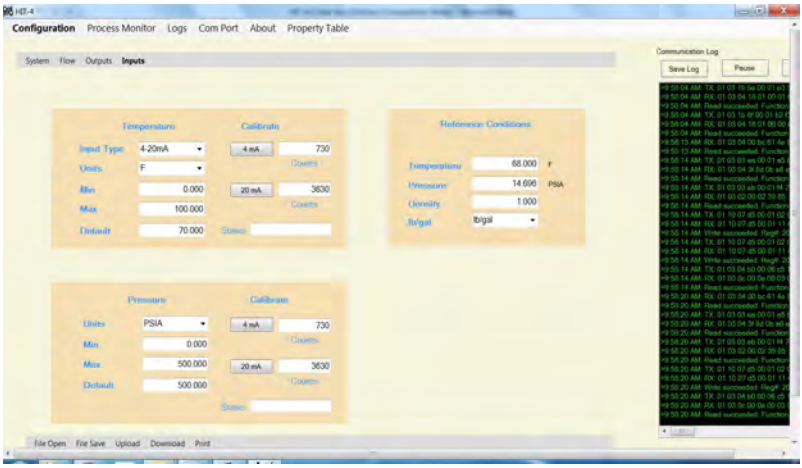

Temperature Input Type:
Drop down menu selection:
RTD: 100 Ohm, DIN385
4-20mA: 4 to 20mA temperature transmitter

Temperature Units:
Drop down menu selection:
C: Degrees Celsius
F: Degrees Fahrenheit

Temperature Min:
Temperature value for 4mA input. Valid entries -450F to 999F (-267.8C to 537.2C).

Temperature Max:
Temperature value for 20mA input. Valid entries -449F to 1000F (-267.2C to 537.8C).

Temperature Default:
Select default temperature condition. Valid entries -450F to 1000F (-267.8C to 537.8C).

Temperature Calibrate 4mA:
Connect 4mA source to temperature input and press 4mA button to calibrate Min.

Temperature Calibrate 20mA:
Connect 20mA source to temperature input and press 20mA button to calibrate Max.

Pressure Units:
Drop down menu selection:

PSIA
BAR-A
PSIG
BAR-G

Pressure Min:
Pressure value for 4mA input. Valid entries 0 psia to 49999 psia (0 bar to 3447.3 bar).

Pressure Max:
Pressure value for 20mA input. Valid entries 1 psia to 50000 psia (0.069 bar to 3447.4 bar).

Pressure Default:
Select default pressure condition. Valid entries 0 psia to 50000 psia (0 bar to 3447.4 bar).

Pressure Calibrate 4mA:
Connect 4mA source to pressure input and press 4mA button to calibrate Min.

Pressure Calibrate 20mA:
Connect 20mA source to pressure input and press 20mA button to calibrate Max.

Reference Temperature:
Enter reference temperature in selected units.

Reference Pressure:
Enter reference pressure in selected units.

Reference Density:
Input reference density to be used for mass flow calculations.

Reference Density Units:
Drop down menu selection:
LB/FT3
KG/M3

Z-Table Page

The Z-Table page is used to upload/download gas compressibility files.

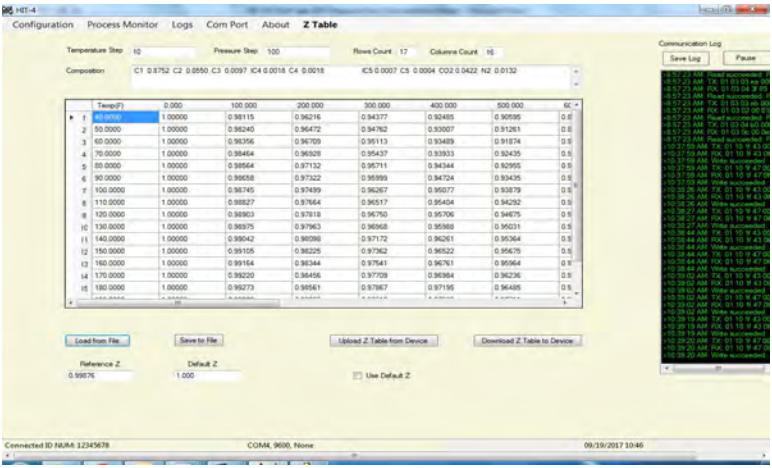

The parameters at the top of the page display the attributes of the Z-table as well as the gas composition.

The buttons at the bottom of the page are used to load Z-Tables from file, save to file, upload from the device and download to the device.

Reference Z:
Enter the gas compressibility at reference conditions.

Default Z:
Enter the gas compressibility at nominal operating conditions.

Configuration Files

HIT-4 Communication Program Software allows the configuration of the device to be saved as a text file for future use. Configuration files may be saved from any of the configuration screens. The two available file functions are:

File Open:
Opens a previously saved configuration file. File format is *.txt.

File Save:
Saves the configuration as a text file.

Download the Configuration

Once all the required parameters have been programmed, the configuration may be downloaded to the HIT-4 by clicking on the "Download" button located on the bottom of any of the configuration screens.

Note: As each configuration parameter is entered, the parameter is automatically sent to the HIT-4.

Upload the Configuration

Clicking of the "Upload" button located on the bottom of any of the configuration screen will read the configuration data from the unit.

Printing Configuration Files

The configuration may be printed by clicking on the "Print" button located on the bottom of any of the configuration screens.

When the "Print" button is clicked on, the user has the option to select a printer for printing or saving the configuration as a text file.

Process Monitor

The Process Monitor screen allows the user to monitor the process flow variables such as Flow Total, Grand Total, Flow Rate, Temperature, Pressure and Compressibility. These variables can be read once or automatically updated on a user defined time interval by clicking the Start Auto Update button.

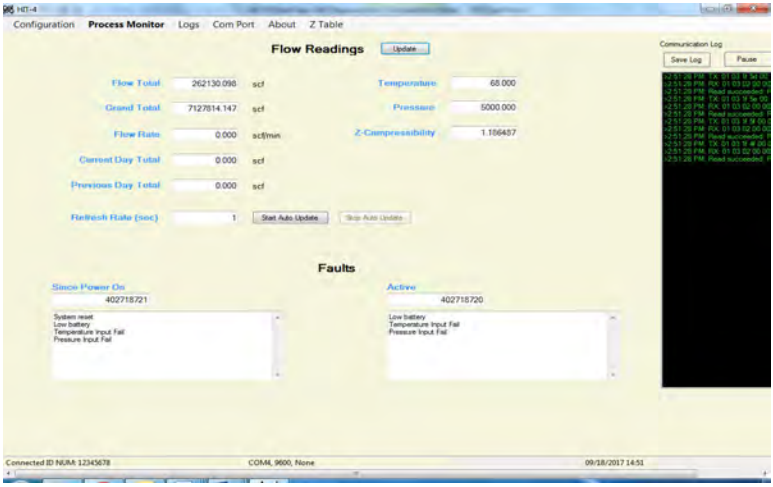

Flow Readings Update:
Clicking on the “Update” button will read and display the “Flow Total”, “Grand Total”, “Flow Rate”, “Current Day Total”, and “Previous Day Total”.

Refresh Rate (sec):
Sets update rate in seconds when the Flow Readings are taken in the automatic update mode.

Start Auto Update:
Click on the “Start Auto Update” button to have the HIT-4 software auto poll the selected device and in real time to update the “Flow Total”, “Grand Total”, “Flow Rate”, “Current Day Total”, and “Previous Day Total”.

Stop Auto Update:
Click on the “Stop Auto Update” stops auto updating.

Faults

HIT-4 self-diagnostic function records the following fault conditions:

Power Reset
Low battery
Pulse output overflow
Alarm, rate low
Alarm, rate high
Alarm, total
Flash segment 1 invalid
Flash segment 2 invalid
Maximum input frequency exceeded
EEPROM read error on startup
Code execution error
Flow rate exceeds 20mA setting
Temperature Input Fail
Pressure Input Fail
Flash Segments ZTable Invalid

The fault conditions are reported on the Process Monitor page. Faults currently active are displayed in the “Active” window. Faults that have occurred in the past, since the last power reset, are displayed in the “Since Power On” window. The numerical code displayed above each window is used for factory diagnostics.

Data Logs

The HIT-4 records flow data into hourly and daily logs. Each log entry contains a Date/Time stamp, Total Flow and Run Time. The Run Time is the duration of flow in seconds recorded during the log interval. The maximum Run Time for an hourly log is 3600 and 86400 for a daily log. The data can be viewed in tabular, graph, save to file, print logs, and to export log data into an Excel spreadsheet. In addition the Event log allows the user to identify changes to the configuration parameters.

The Flow Logs and Event Log can be downloaded from the HIT-4 by clicking on the “Logs” in the menu bar.

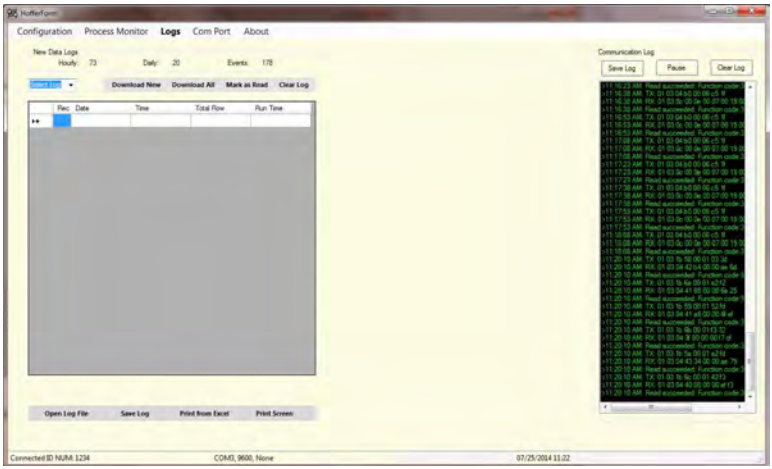

The “New Data Logs” field will display the number of new “Hourly Logs”, “Daily Logs” and “Event Log”.

Logs are downloaded by clicking on the drop down “Select Log” box, and selecting the desired log to be downloaded. Once the selection has been made, either click on the “Download New” or “Download All” menu options.

For example; the desired log to be downloaded is the Hourly Log. Select Hourly Log from the drop down selection box and click on “Download All”. The following screen will be generated:

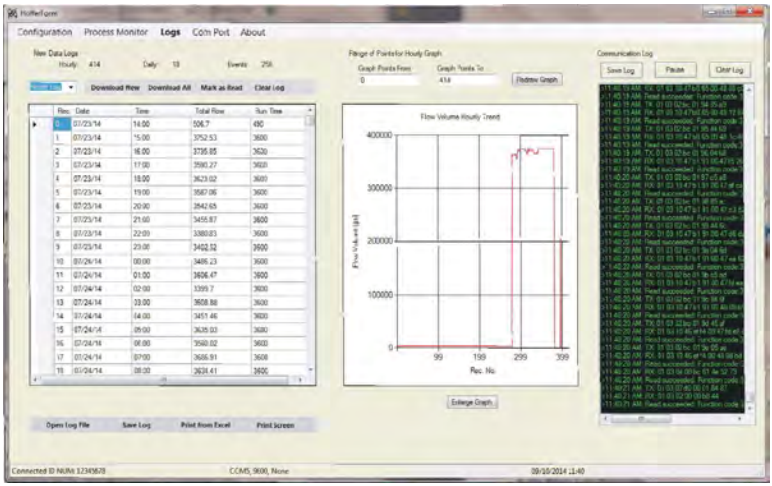

From this screen, the user will be able to save the log, export log to Excel for printing or saving, clear the log, mark records as being read and use the graph for analyzing the flow volume trends.

Records can be selected either individually or in multiples to be marked as read. Individual records can be selected by clicking on the furthest left hand column. Multiple records can be selected by clicking on the first and last desired records to be marked as read. Selected record(s) will be highlighted in blue.

Clicking on the “Mark as Read” menu selection will mark all highlighted records as read, and change the new data logs status.

This page intentionally left blank

8. MAINTENANCE

Batteries require periodic replacement, and battery life depends on whether battery power is the primary or secondary power source.

All configuration settings are stored in nonvolatile memory; therefore, configuration settings will not be lost in the event of battery failure.

Lithium Battery Replacement

⚠ **WARNING: To prevent ignition of hazardous atmospheres, do not remove the cover unless the area is void of combustible gas and vapors. Replace the batteries only with battery pack part number 100-2732 for Ex d certified systems.**

⚠ **WARNING: The lithium battery that powers the HIT-4G is a sealed unit; however, should Lithium batteries develop a leak, toxic fumes could escape upon opening the enclosure. Ensure that the instrument is in a well-ventilated area before opening the enclosure to avoid breathing fumes trapped inside the enclosure. Exercise caution in handling and disposing of spent or damaged batteries.**

Important: Before replacing the lithium battery press the ► key to save the Total and Grand Total to nonvolatile memory. Once the battery is replaced and power is restored to the unit, the last saved Total will be displayed

The lithium battery is secured inside the enclosure by a Velcro strap and connected to a connector (J3) near the top of the circuit assembly.

To replace a lithium battery in the HIT-4, perform the following steps:

Ex Enclosure:

1. Loosen the cover set screw and unscrew the cover of the enclosure counter-clockwise until it separates from the main body of the enclosure.

2. Using a small standard blade screwdriver, remove the two #4-40 screws located to the right and left side of the LCD display.

3. Lift the display/keypad assembly from the enclosure, making sure the circuit assembly does not contact the enclosure.
4. Loosen the Velcro strap, disconnect the battery from the J3 connector on the circuit assembly, and remove the battery from the enclosure.

5. Install the new battery in the enclosure in the same position as the original battery, and secure the Velcro tightly around the battery.

6. Connect the replacement battery to the J3 connector.

7. Place the circuit assembly over the standoffs and fasten with the two #4-40 screws, ensuring that all connector wiring is inside the enclosure.

8. Replace the enclosure cover, threading it onto the enclosure in a clockwise direction.

NEMA Enclosure:

1. Loosen, by turning counter-clockwise, the screws in each corner of the enclosure cover to remove.

2. Remove four #4-40 thumb screws from the front panel by turning counter-clockwise.

3. Lift the display assembly from the enclosure.

4. Loosen the Velcro strap, disconnect the battery from the J3 connector on the circuit assembly, and remove the battery from the enclosure.

5. Install the new battery in the enclosure in the same position as the original battery, and secure the Velcro tightly around the battery.

6. Connect the replacement battery to the J3 connector.

7. Replace the display assembly and enclosure cover.

Important: The interruption of power to the HIT-4 will cause the internal clock time to be inaccurate. After replacing the battery, set the date and time via the HIT-4 Communication Program or use the front panel keys.

Battery shelf life is estimated at 10 years at a storage temperature of 25° C.

APPENDIX A

DECLARATION OF CONFORMITY

HOFFER FLOW CONTROLS, INC.
Perfecting Measurement™
107 Kitty Hawk Lane • P.O. Box 2145 • Elizabeth City, North Carolina 27906-2145
1-800-628-4584 • (252) 331-1997 • FAX (252) 331-2886
www.hofferflow.com • Email: info@hofferflow.com

EU Declaration of Conformity – HIT-4 Flow Rate Indicator/Totalizer

Manufacturer: Hoffer Flow Controls Inc, 107 Kitty Hawk Ln, Elizabeth City, NC 27909

Equipment: Flame Proof Flow Rate Indicator/Totalizer

Designation/Model: HIT-4X-X-X-X-X-X-X-X-X-X
NOTE: "X" in Model number may be any combination of numbers and characters representing specific options.

Marking: With Aluminum Explosion Proof Enclosure

Canada/US:
Class I, Division 1, Groups CD; Class II, Division 1, Groups E,F,G; Class III; T6 Type 4X;
Ex db IIB T6; Gb; Ex tb IIIC T80°C Db; IP66;
Class I, Zone 1, AEx db IIB T6; Gb; Zone 21, AEx tb IIIC T80°C Db; IP66:

ATEX/IECEx:
II 2 G Ex db IIB T6 Gb
II 2 D Ex tb IIIC T80°C Db IP66
T1-T6 = -40°C to +78°C

Seal within 50mm of enclosure.

HOFFER FLOW CONTROLS, INC.
Perfecting Measurement™
107 Kitty Hawk Lane • P.O. Box 2145 • Elizabeth City, North Carolina 27906-2145
1-800-628-4584 • (252) 331-1997 • FAX (252) 331-2888
www.hofferflow.com • Email: info@hofferflow.com

This declaration of conformity is issued under the sole responsibility of the manufacturer. The object of the declaration is in conformity with the relevant Union harmonisation Legislation. We hereby declare that the product, which is subject of this declaration, is in conformity with the following standards:

ATEX	ATEX Directive 2014/34/EU: Equipment and protective systems intended for use in potentially explosive atmospheres. Applicable Standards - EN 60079-0:2017; EN 60079-1:2014 and EN 60079-31:2014	EU-Type Examination Certificate: Sira 17 ATEX 1353 X
CSA	Applicable CSA Requirements: CSA C22.2 No. 25-1966 (R2014), CSA C22.2 No. 30:2012, CSA C22.2 No 94.2-15; CAN/ CSA C22.2 No 61010-1-12; 60079-0:15, 60079-1:16 60079-31:15, 60529:16, FM 3600:2011, FM 3615:2006, and FM 3616:2011; UL 61010-1:2012, 60079-0:15, 60079-1:16, 60079-31:15, and 60529:16	CSA-Type Examination Certificate:
IECEx	IEC Certification for Explosive Atmospheres. Applicable Standards IEC 60079-0:2017 IEC 60079-1:2014-06 and IEC 60079-31:2013	IECEx CSA 17.0014X

EU-Directive 2014/34/EU Annex IV/IECEx Certificate issued by:

The Certification Body for Explosion Protection
of TÜV Rheinland Industrie Service GmbH

Certificate No.: 01 220 1609028 Notified Body Number: 0035

EU type examination certificate issued by: Certificate: Sira 17 ATEX 1353 X CSA Group Netherlands B.V. Utrechseweg 310 6812 AR Arnhem Netherlands	CSA-Type Examination Certification issued by: CSA Group Testing & Certification Inc. Edmonton, AB, Canada T6N 1E6

John DeFeo

_____Date: 12/11/2020
John DeFeo, Compliance Engineer
Hoffer Flow Controls, Inc.

APPENDIX B

INSTALLATION DRAWINGS AND CONDITIONS FOR SAFE USE FOR CERTIFIED SYSTEMS

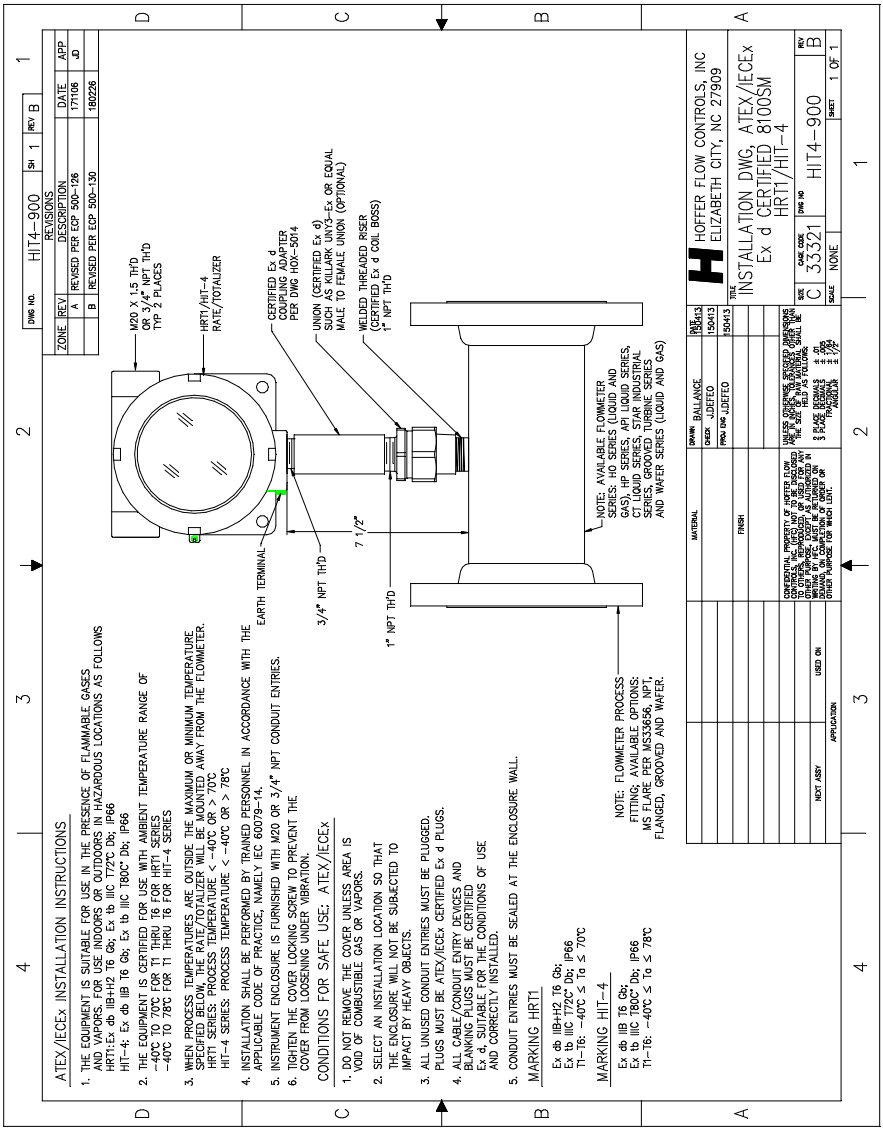
DWG NO. HIT4-900 SH 1 REV B
REVISIONS
ZONE REV DESCRIPTION DATE APP
A REVISED PER ECP 500-126 171106 JD
B REVISED PER ECP 500-130 180226
ATEX/IECEx INSTALLATION INSTRUCTIONS
1. THE EQUIPMENT IS SUITABLE FOR USE IN THE PRESENCE OF FLAMMABLE GASES AND VAPORS, FOR USE INDOORS OR OUTDOORS IN HAZARDOUS LOCATIONS AS FOLLOWS
HRT1:Ex db IIB+H2 T6 Gb; Ex tb IIIC T72°C Db; IP66
HIT-4: Ex db IIB T6 Gb; Ex tb IIIC T80°C Db; IP66
2. THE EQUIPMENT IS CERTIFIED FOR USE WITH AMBIENT TEMPERATURE RANGE OF -40°C TO 70°C FOR HRT1 SERIES
-40°C TO 78°C FOR T1 THRU T6 FOR HIT-4 SERIES
3. WHEN PROCESS TEMPERATURES ARE OUTSIDE THE MAXIMUM OR MINIMUM TEMPERATURE SPECIFIED BELOW, THE RATE/TOTALIZER WILL BE MOUNTED AWAY FROM THE FLOWMETER.
HRT1 SERIES: PROCESS TEMPERATURE < -40°C OR > 70°C
HIT-4 SERIES: PROCESS TEMPERATURE < -40°C OR > 78°C
4. INSTALLATION SHALL BE PERFORMED BY TRAINED PERSONNEL IN ACCORDANCE WITH THE APPLICABLE CODE OF PRACTICE, NAMELY IEC 60079-14.
5. INSTRUMENT ENCLOSURE IS FURNISHED WITH M20 OR 3/4" NPT CONDUIT ENTRIES.
6. TIGHTEN THE COVER LOCKING SCREW TO PREVENT THE COVER FROM LOOSENING UNDER VIBRATION.
CONDITIONS FOR SAFE USE: ATEX/IECEx
1. DO NOT REMOVE THE COVER UNLESS AREA IS VOID OF COMBUSTIBLE GAS OR VAPORS.
2. SELECT AN INSTALLATION LOCATION SO THAT THE ENCLOSURE WILL NOT BE SUBJECTED TO IMPACT BY HEAVY OBJECTS.
3. ALL UNUSED CONDUIT ENTRIES MUST BE PLUGGED. PLUGS MUST BE ATEX/IECEx CERTIFIED Ex d PLUGS.
4. ALL CABLE/CONDUIT ENTRY DEVICES AND BLANKING PLUGS MUST BE CERTIFIED Ex d, SUITABLE FOR THE CONDITIONS OF USE AND CORRECTLY INSTALLED.
5. CONDUIT ENTRIES MUST BE SEALED AT THE ENCLOSURE WALL.
MARKING HRT1
Ex db IIB+H2 T6 Gb;
Ex tb IIIC T72C° Db; IP66
T1-T6: -40°C ≤ Ta ≤ 70°C
MARKING HIT-4
Ex db IIB T6 Gb;
Ex tb IIIC T80C° Db; IP66
T1-T6: -40°C ≤ Ta ≤ 78°C
M20 X 1.5 TH'D OR 3/4" NPT TH'D TYP 2 PLACES
HRT1/HIT-4 RATE/TOTALIZER
CERTIFIED Ex d COUPLING ADAPTER PER DWG HOX-5014
UNION (CERTIFIED Ex d) SUCH AS KILLARK UNY3-Ex OR EQUAL MALE TO FEMALE UNION (OPTIONAL)
WELDED THREADED RISER (CERTIFIED Ex d COIL BOSS) 1" NPT TH'D
EARTH TERMINAL
3/4" NPT TH'D
7 1/2"
1" NPT TH'D
NOTE: AVAILABLE FLOWMETER SERIES: HO SERIES (LIQUID AND GAS), HP SERIES, API LIQUID SERIES, CT LIQUID SERIES, STAR INDUSTRIAL SERIES, GROOVED TURBINE SERIES AND WAFER SERIES (LIQUID AND GAS)
NOTE: FLOWMETER PROCESS FITTING; AVAILABLE OPTIONS: MS FLARE PER MSS3646, NPT, FLANGED, GROOVED AND WAFER.
HOFFER FLOW CONTROLS, INC
ELIZABETH CITY, NC 27909
TITLE INSTALLATION DWG, ATEX/IECEx Ex d CERTIFIED 8100SM HRT1/HIT-4
SIZE C CAGE CODE 33321 DWG NO HIT4-900 REV B
SCALE NONE SHEET 1 OF 1
DRAWN BALLANCE 150413
CHECK JDEFEO 150413
PROJ ENG JDEFEO 150413
MATERIAL
FINISH
CONFIDENTIAL PROPERTY OF HOFFER FLOW CONTROLS, INC. NOT TO BE DISCLOSED OR REPRODUCED IN WHOLE OR IN PART FOR OTHER PURPOSES EXCEPT AS AUTHORIZED IN WRITING BY HOFFER FLOW CONTROLS, INC.
UNLESS OTHERWISE SPECIFIED DIMENSIONS ARE IN INCHES. TOLERANCES UNLESS OTHERWISE SPECIFIED ARE HELD AS FOLLOWS:
± .005
± .010
± 1/64
± 1/32
± 1/16
± 1/8
± 1/4
± 1/2
3 PLACE DECIMALS
2 PLACE DECIMALS
FRACTIONS
ANGULAR
NEXT ASSY
USED ON
APPLICATION

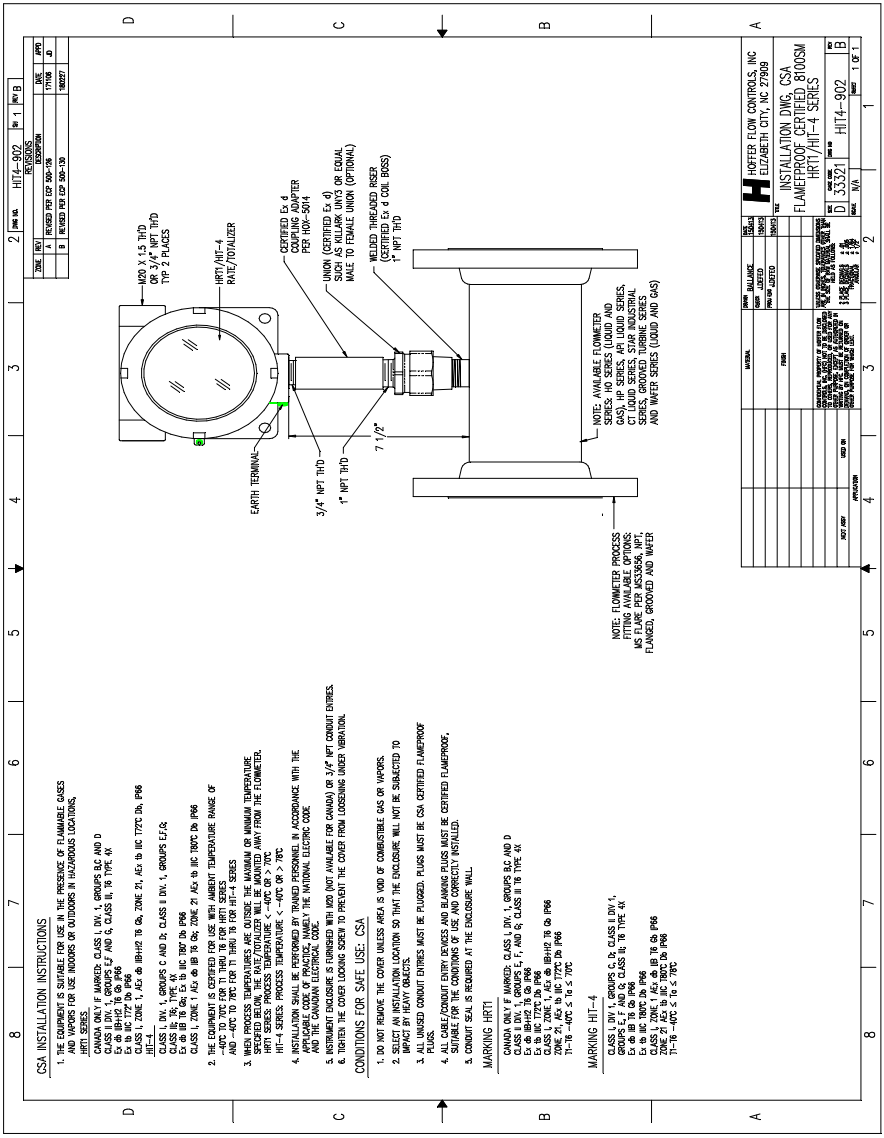
CSA INSTALLATION INSTRUCTIONS
1. THE EQUIPMENT IS SUITABLE FOR USE IN THE PRESENCE OF FLAMMABLE GASES AND VAPORS FOR USE INDOORS OR OUTDOORS IN HAZARDOUS LOCATIONS.
HRT1 SERIES
CANADA ONLY IF MARKED: CLASS I, DIV. 1, GROUPS B,C AND D
CLASS II DIV. 1, GROUPS E,F AND G, CLASS III, T6 TYPE 4X
Ex ib IIB+H2 T6 Gb IP66
Ex ia IIC T2T3 Da IP66
CLASS I, ZONE 1 AEx ib IIB+H2 T6 Gb, ZONE 21, AEx ia IIC T2T3 Da, IP66
HIT-4
CLASS I, DIV. 1, GROUPS C AND D, CLASS II DIV. 1, GROUPS E,F,G,
CLASS III T6 TYPE 4X
Ex ia IIC T2 Ga, Ex ia IIC T6T1 Da IP66
CLASS I, ZONE 1 AEx ib IIB T6 Gb, ZONE 21 AEx ia IIC T6T1 Da IP66
2. THE EQUIPMENT IS CERTIFIED FOR USE WITH AMBIENT TEMPERATURE RANGE OF -40°C TO 70°C FOR T1 THRU T6 FOR HRT1 SERIES AND -40°C TO 78°C FOR T1 THRU T6 FOR HIT-4 SERIES
3. WHEN PROCESS TEMPERATURES ARE OUTSIDE THE MAXIMUM OR MINIMUM TEMPERATURE SPECIFIED BELOW, THE FAILSTOTALIZER WILL BE MOUNTED AWAY FROM THE FLOWMETER.
HRT1 SERIES: PROCESS TEMPERATURE < -40°C OR > 70°C
HIT-4 SERIES: PROCESS TEMPERATURE < -40°C OR > 78°C
4. INSTALLATION SHALL BE PERFORMED BY TRAINED PERSONNEL IN ACCORDANCE WITH THE APPLICABLE CODE OF PRACTICE, NAMELY THE NATIONAL ELECTRIC CODE AND THE CANADIAN ELECTRICAL CODE.
5. INSTRUMENT ENCLOSURE IS FURNISHED WITH M20 (NOT AVAILABLE FOR CANADA) OR 3/4" NPT CONDUIT ENTRIES.
6. TIGHTEN THE COVER LOCKING SCREW TO PREVENT THE COVER FROM LOOSENING UNDER VIBRATION.
CONDITIONS FOR SAFE USE: CSA
1. DO NOT REMOVE THE COVER UNLESS AREA IS VOID OF COMBUSTIBLE GAS OR VAPORS.
2. SELECT AN INSTALLATION LOCATION SO THAT THE ENCLOSURE WILL NOT BE SUBJECTED TO IMPACT BY HEAVY OBJECTS.
3. ALL UNUSED CONDUIT ENTRIES MUST BE PLUGGED. PLUGS MUST BE CSA CERTIFIED FLAMEPROOF PLUGS.
4. ALL CABLE/CONDUIT ENTRY DEVICES AND BLANKING PLUGS MUST BE CERTIFIED FLAMEPROOF, SUITABLE FOR THE CONDITIONS OF USE AND CORRECTLY INSTALLED.
5. CONDUIT SEAL IS REQUIRED AT THE ENCLOSURE WALL.
MARKING HRT1
CANADA ONLY IF MARKED: CLASS I, DIV. 1, GROUPS B,C AND D
CLASS II DIV. 1, GROUPS E, F, AND G, CLASS III T6 TYPE 4X
Ex ib IIB+H2 T6 Gb IP66
Ex ia IIC T2T3 Da IP66
CLASS I, ZONE 1 AEx ib IIB+H2 T6 Gb IP66
ZONE 21, AEx ia IIC T2T3 Da IP66
T1-T6 -40°C ≤ Ta ≤ 70°C
MARKING HIT-4
CLASS I, DIV 1, GROUPS C, D, CLASS II DIV 1, GROUPS E, F, AND G, CLASS III, T6 TYPE 4X
Ex ia IIC T2 Ga IP66
CLASS I, ZONE 1 AEx ib IIB T6 Gb IP66
ZONE 21, AEx ia IIC T6T1 Da IP66
T1-T6 -40°C ≤ Ta ≤ 78°C
M20 X 1.5 THD OR 3/4" NPT THD TYP 2 PLACES
HRT1/HIT-4 RATE/TOTALIZER
CERTIFIED Ex d COUPLING ADAPTER PER H0K-5014
UNION (CERTIFIED Ex d) SUCH AS WILLIAMS UA 03 MALE TO FEMALE UNION (OPTIONAL)
WELDED THREADED RISER (CERTIFIED Ex d COIL BOSS) 1" NPT THD
EARTH TERMINAL
3/4" NPT THD
1" NPT THD
7 1/2"
NOTE: AVAILABLE FLOWMETER SERIES: HO SERIES (LIQUID AND GAS), HS SERIES, ATL (LIQUIDS), CT (LIQUID SERIES), GEAR INDUSTRIAL SERIES, GROOVED TURBINE SERIES AND WAFER SERIES (LIQUID AND GAS)
NOTE: FLOWMETER PROCESS FITTING AVAILABLE OPTIONS: MS FLARE PER MSS3656, NPT, FLANGED, GROOVED AND WAFER
HOFFER FLOW CONTROLS, INC
ELIZABETH CITY, NC 27909
INSTALLATION DWG, CSA
FLAMEPROOF CERTIFIED 810GSM
HRT1/HIT-4 SERIES
HIT4-902
D 33321
B
SCALE N/A
SHEET 1 OF 1
1

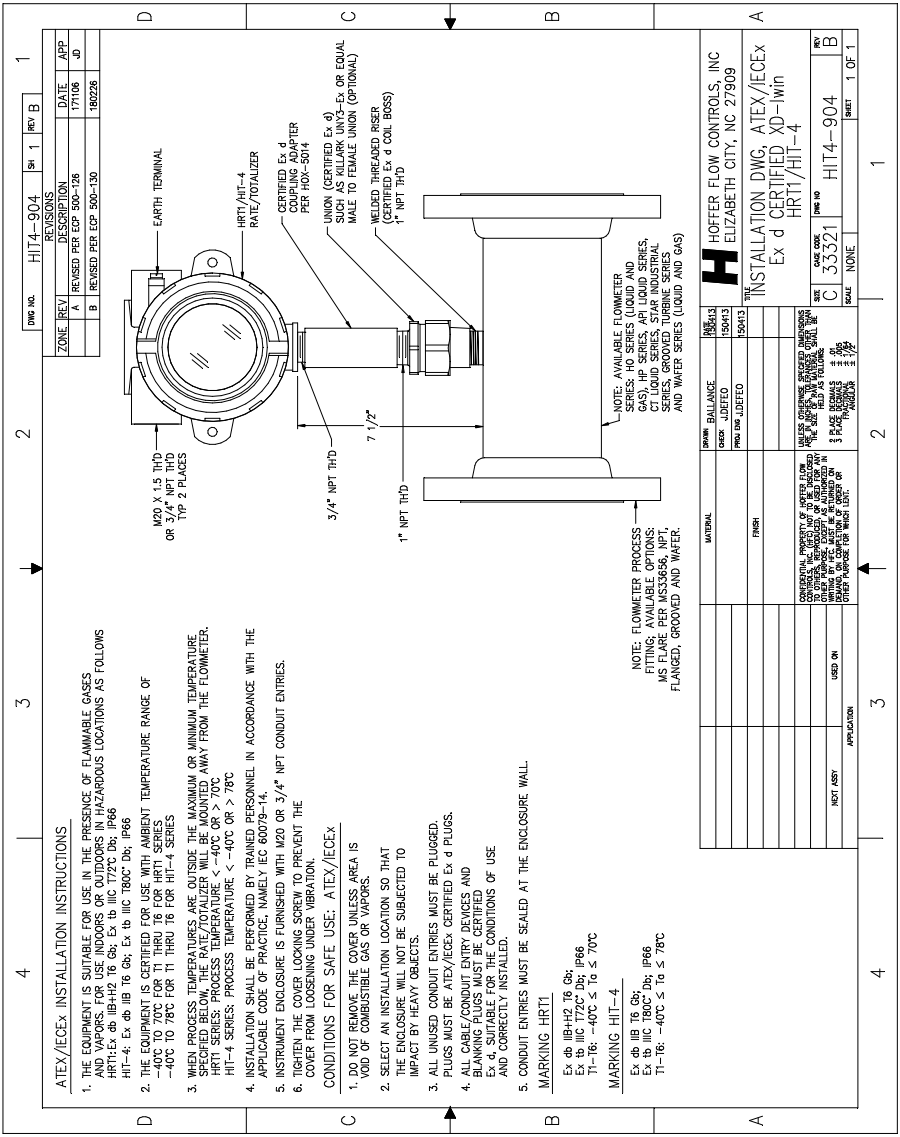
DWG NO. HIT4-904 SH 1 REV B
REVISIONS
ZONE REV DESCRIPTION DATE APP
A REVISED PER ECP 500-126 171106 JD
B REVISED PER ECP 500-130 180226
ATEX/IECEx INSTALLATION INSTRUCTIONS
1. THE EQUIPMENT IS SUITABLE FOR USE IN THE PRESENCE OF FLAMMABLE GASES AND VAPORS. FOR USE INDOORS OR OUTDOORS IN HAZARDOUS LOCATIONS AS FOLLOWS
HRT1:Ex db IIB+H2 T6 Gb; Ex tb IIIC T72°C Db; IP66
HIT-4: Ex db IIB T6 Gb; Ex tb IIIC T80°C Db; IP66
2. THE EQUIPMENT IS CERTIFIED FOR USE WITH AMBIENT TEMPERATURE RANGE OF
-40°C TO 70°C FOR T1 THRU T6 FOR HRT1 SERIES
-40°C TO 78°C FOR T1 THRU T6 FOR HIT-4 SERIES
3. WHEN PROCESS TEMPERATURES ARE OUTSIDE THE MAXIMUM OR MINIMUM TEMPERATURE SPECIFIED BELOW, THE RATE/TOTALIZER WILL BE MOUNTED AWAY FROM THE FLOWMETER.
HRT1 SERIES: PROCESS TEMPERATURE < -40°C OR > 70°C
HIT-4 SERIES: PROCESS TEMPERATURE < -40°C OR > 78°C
4. INSTALLATION SHALL BE PERFORMED BY TRAINED PERSONNEL IN ACCORDANCE WITH THE APPLICABLE CODE OF PRACTICE, NAMELY IEC 60079-14.
5. INSTRUMENT ENCLOSURE IS FURNISHED WITH M20 OR 3/4" NPT CONDUIT ENTRIES.
6. TIGHTEN THE COVER LOCKING SCREW TO PREVENT THE COVER FROM LOOSENING UNDER VIBRATION.
CONDITIONS FOR SAFE USE: ATEX/IECEx
1. DO NOT REMOVE THE COVER UNLESS AREA IS VOID OF COMBUSTIBLE GAS OR VAPORS.
2. SELECT AN INSTALLATION LOCATION SO THAT THE ENCLOSURE WILL NOT BE SUBJECTED TO IMPACT BY HEAVY OBJECTS.
3. ALL UNUSED CONDUIT ENTRIES MUST BE PLUGGED. PLUGS MUST BE ATEX/IECEx CERTIFIED Ex d PLUGS.
4. ALL CABLE/CONDUIT ENTRY DEVICES AND BLANKING PLUGS MUST BE CERTIFIED Ex d, SUITABLE FOR THE CONDITIONS OF USE AND CORRECTLY INSTALLED.
5. CONDUIT ENTRIES MUST BE SEALED AT THE ENCLOSURE WALL.
MARKING HRT1
Ex db IIB+H2 T6 Gb;
Ex tb IIIC T72°C Db; IP66
T1-T6: -40°C ≤ Ta ≤ 70°C
MARKING HIT-4
Ex db IIB T6 Gb;
Ex tb IIIC T80°C Db; IP66
T1-T6: -40°C ≤ Ta ≤ 78°C
EARTH TERMINAL
HRT1/HIT-4 RATE/TOTALIZER
CERTIFIED Ex d COUPLING ADAPTER PER HOX-5014
UNION (CERTIFIED Ex d) SUCH AS KILLARK UNY3-Ex OR EQUAL MALE TO FEMALE UNION (OPTIONAL)
WELDED THREADED RISER (CERTIFIED Ex d COL BOSS) 1" NPT TH'D
M20 X 1.5 TH'D OR 3/4" NPT TH'D TYP 2 PLACES
3/4" NPT TH'D
7 1/2"
1" NPT TH'D
NOTE: AVAILABLE FLOWMETER SERIES: HO SERIES (LIQUID AND GAS), HP SERIES, API LIQUID SERIES, CT/TD SERIES, CT SERIES, VERTICAL SERIES, GROOVED TURBINE SERIES AND WAFER SERIES (LIQUID AND GAS)
NOTE: FLOWMETER PROCESS FITTING; AVAILABLE OPTIONS: MS FLARE PER MS33656, NPT, FLANGED, GROOVED AND WAFER.
HOFFER FLOW CONTROLS, INC
ELIZABETH CITY, NC 27909
TITLE INSTALLATION DWG, ATEX/IECEx Ex d CERTIFIED XD-1win HRT1/HIT-4
SIZE C CAGE CODE 33321 DWG NO HIT4-904 REV B
SCALE NONE SHEET 1 OF 1
DRAWN BALLANCE 150413
CHECK JLDEFEO 150413
ENGR DWG JLDEFEO 150413
MATERIAL
FINISH
UNLESS OTHERWISE SPECIFIED DIMENSIONS ARE IN INCHES. TOLERANCE ON FRACTIONS ± 1/64 DECIMALS ± .01 2 PLACE DECIMALS ± .005 3 PLACE DECIMALS ± .0005 ANGULAR ± 1/2°
CONFIDENTIAL PROPERTY OF HOFFER FLOW CONTROLS, INC. THIS DOCUMENT IS NOT TO BE DISCLOSED TO OTHERS, REPRODUCED, OR USED FOR ANY OTHER PURPOSE THAN THE PURPOSE STATED IN WRITING BY HFC. ALSO, IT IS REQUIRED THAT THIS DOCUMENT BE RETURNED ON DEMAND OR UPON COMPLETION OF THE OTHER PURPOSE STATED WITH THE WRITTEN REQUEST.
NEXT ASSY USED ON
APPLICATION

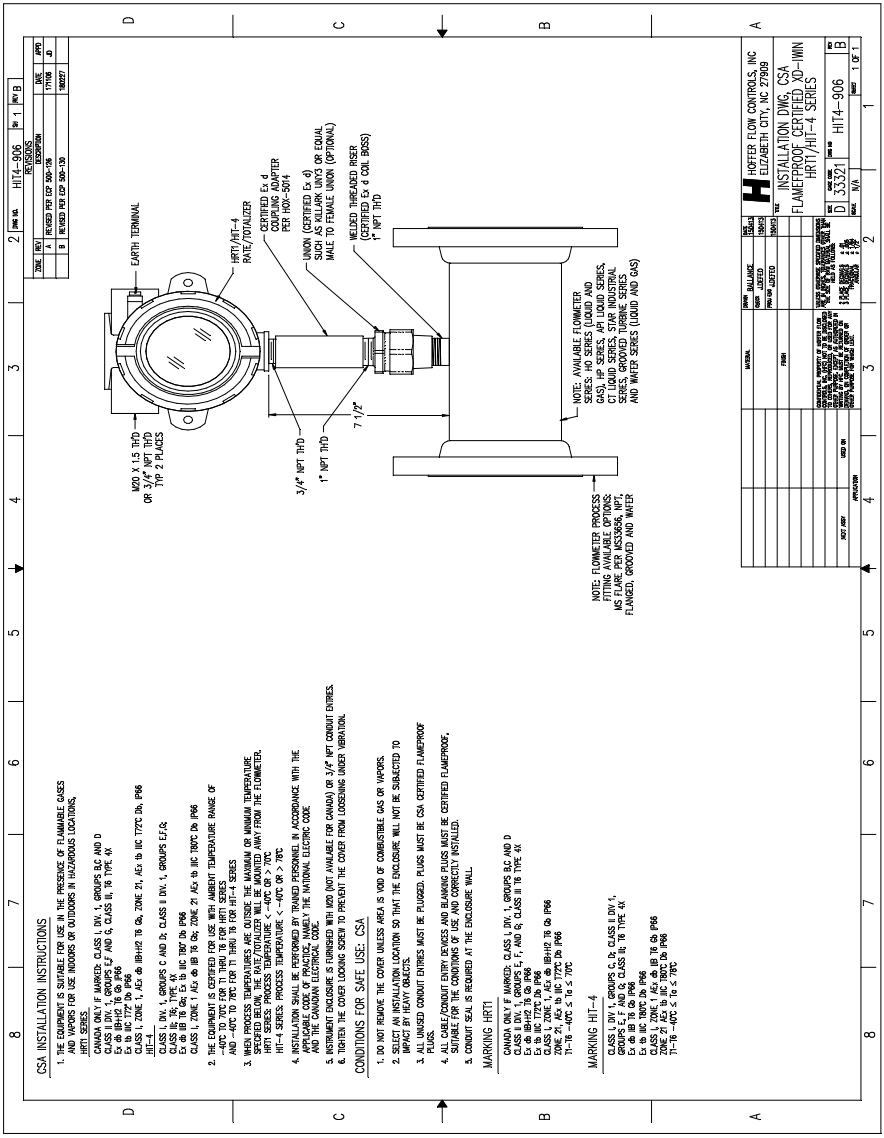
CSA INSTALLATION INSTRUCTIONS
1. THE EQUIPMENT IS SUITABLE FOR USE IN THE PRESENCE OF FLAMMABLE GASES AND VAPORS FOR USE INDOORS OR OUTDOORS IN HAZARDOUS LOCATIONS.
HRT1 SERIES
CANADA ONLY IF MARKED: CLASS I, DIV. 1, GROUPS B,C AND D
CLASS II DIV. 1, GROUPS E,F AND G, CLASS III, T6 TYPE 4X
Ex ib IIB+H2 T6 Gb IP66
Ex ia IIC T2 Ga IP66
CLASS I, ZONE 1 AEx ib IIB+H2 T6 Gb, ZONE 21, AEx tb IIC T72°C Db, IP66
HIT-4
CLASS I, DIV. 1, GROUPS C AND D, CLASS II DIV. 1, GROUPS E,F,G.
CLASS III, T6 TYPE 4X
Ex ia IIC T2 Ga, Ex ib IIC T6 Gb IP66
CLASS I, ZONE 1 AEx ib IIB T6 Gb, ZONE 21 AEx tb IIC T80°C Db IP66
2. THE EQUIPMENT IS CERTIFIED FOR USE WITH AMBIENT TEMPERATURE RANGE OF –40°C TO 70°C FOR T1 THRU T6 FOR HRT1 SERIES
AND –40°C TO 78°C FOR T1 THRU T6 FOR HIT-4 SERIES
3. WHEN PROCESS TEMPERATURES ARE OUTSIDE THE MAXIMUM OR MINIMUM TEMPERATURE SPECIFIED BELOW, THE FALT/TOTALIZER MUST BE MOUNTED AWAY FROM THE FLOWMETER.
HRT1 SERIES: PROCESS TEMPERATURE < –40°C OR > 70°C
HIT-4 SERIES: PROCESS TEMPERATURE < –40°C OR > 78°C
4. INSTALLATION SHALL BE PERFORMED BY TRAINED PERSONNEL IN ACCORDANCE WITH THE APPLICABLE CODE OF PRACTICE, NAMELY THE NATIONAL ELECTRIC CODE AND THE CANADIAN ELECTRICAL CODE.
5. INSTRUMENT ENCLOSURE IS FURNISHED WITH M20 (NOT AVAILABLE FOR CANADA) OR 3/4" NPT CONDUIT ENTRIES.
6. TIGHTEN THE COVER LOCKING SCREW TO PREVENT THE COVER FROM LOOSENING UNDER VIBRATION.
CONDITIONS FOR SAFE USE: CSA
1. DO NOT REMOVE THE COVER UNLESS AREA IS VOID OF COMBUSTIBLE GAS OR VAPORS.
2. SELECT AN INSTALLATION LOCATION SO THAT THE ENCLOSURE WILL NOT BE SUBJECTED TO IMPACT BY HEAVY OBJECTS.
3. ALL UNUSED CONDUIT ENTRIES MUST BE PLUGGED. PLUGS MUST BE CSA CERTIFIED FLAMEPROOF PLUGS.
4. ALL CABLE/CONDUIT ENTRY DEVICES AND BLANKING PLUGS MUST BE CERTIFIED FLAMEPROOF, SUITABLE FOR THE CONDITIONS OF USE, AND CORRECTLY INSTALLED.
5. CONDUIT SEAL IS REQUIRED AT THE ENCLOSURE WALL.
MARKING HRT1
CANADA ONLY IF MARKED: CLASS I, DIV. 1, GROUPS B,C AND D
CLASS II DIV. 1, GROUPS E, F, AND G, CLASS III T6 TYPE 4X
Ex ib IIB+H2 T6 Gb IP66
Ex ia IIC T2 Ga, Ex ib IIC T6 Gb IP66
CLASS I, ZONE 1 AEx ib IIB+H2 T6 Gb IP66
ZONE 21, AEx tb IIC T72°C Db IP66
T1–T6 –40°C ≤ Ta ≤ 70°C
MARKING HIT-4
CLASS I, DIV 1, GROUPS C, D, CLASS II DIV 1, GROUPS E, F, AND G, CLASS III, T6 TYPE 4X
Ex ia IIC T2 Ga, Ex ib IIC T6 Gb IP66
CLASS I, ZONE 1 AEx ib IIB T6 Gb IP66
ZONE 21 AEx tb IIC T80°C Db IP66
T1–T6 –40°C ≤ Ta ≤ 78°C
EARTH TERMINAL
HRT1/HIT-4 RATE/TOTALIZER
CERTIFIED Ex d COUPLING ADAPTER PER HOX-5014
UNION (CERTIFIED Ex d) SUCH AS KELLAR UNYS OR EQUAL MALE TO FEMALE UNION (OPTIONAL)
WELDED THREADED RISER (CERTIFIED Ex d COIL BOSS) 1" NPT THD
M20 X 1.5 THD OR 3/4" NPT THD TYP 2 PLACES
3/4" NPT THD
1" NPT THD
7 1/2"
NOTE: AVAILABLE FLOWMETER SERIES: HO SERIES (LIQUID AND GAS), HP SERIES, AP LIQUID SERIES, CT LIQUID SERIES, STAR INDUSTRIAL SERIES, GROOVED TURBINE SERIES AND WATER SERIES (LIQUID AND GAS)
NOTE: FLOWMETER PROCESS FITTING AVAILABLE OPTIONS: NS FLANGE, ASME B16.5 WNRF, FLANGED, GROOVED AND WATER
HOFFER FLOW CONTROLS, INC
ELIZABETH CITY, NC 27909
INSTALLATION DWG, CSA
FLAMEPROOF CERTIFIED XD–IWN
HRT1/HIT-4 SERIES
H174–906
D 33321
REV B
SCALE N/A
SHEET 1 OF 1
DWN BALLANCE
CHKD
APVD
MATERIAL
FINISH
DO NOT SCALE DRAWING
DIMENSIONS ARE IN INCHES UNLESS OTHERWISE SPECIFIED
THIS DRAWING IS THE PROPERTY OF HOFFER FLOW CONTROLS, INC. ANY REPRODUCTION IN PART OR WHOLE WITHOUT WRITTEN PERMISSION IS PROHIBITED.
DWG NO
REVISIONS
ZONE REV DESCRIPTION DATE APVD
A REVISED PER ECP 300-106 171106 JD
B REVISED PER ECP 300-130 180227

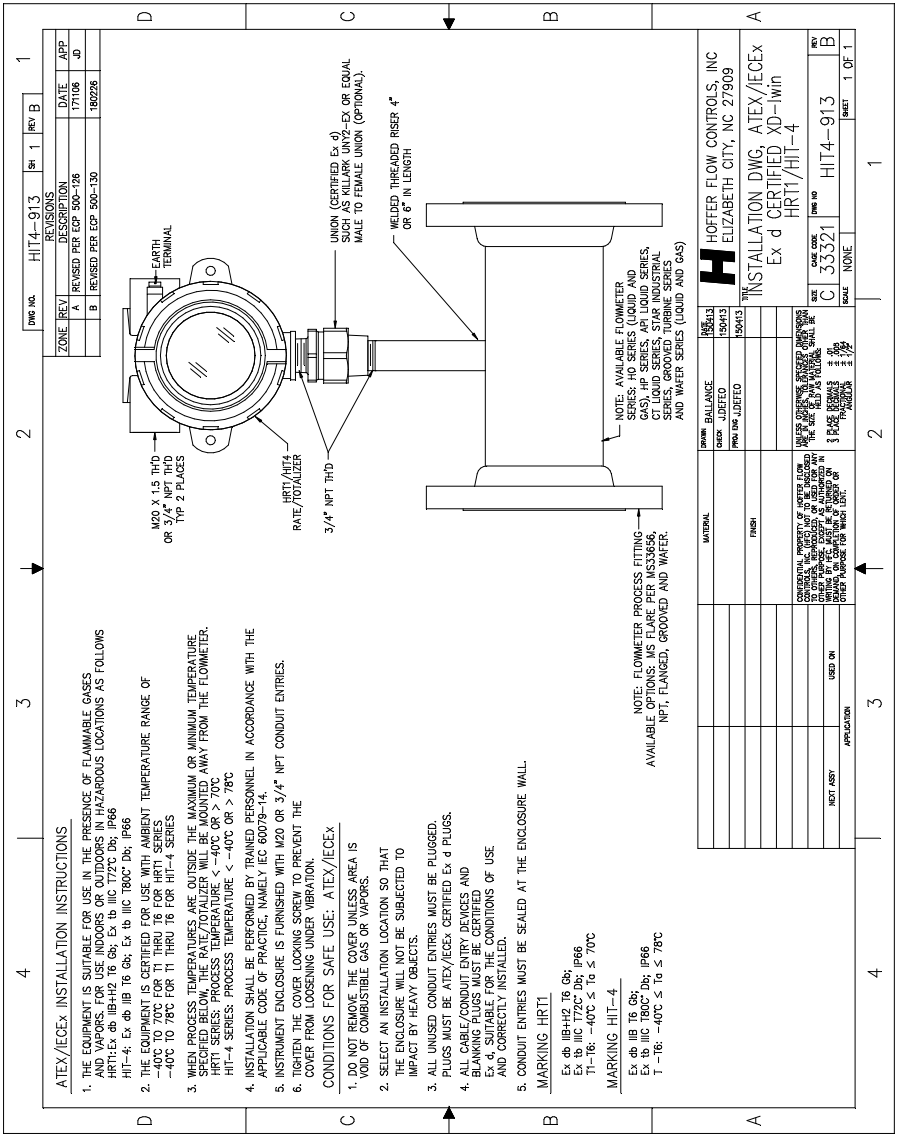
DWG NO. HIT4–913 SH 1 REV B
REVISIONS
ZONE REV DESCRIPTION DATE APP
A REVISED PER ECP 500–126 171106 JD
B REVISED PER ECP 500–130 180226
ATEX/IECEx INSTALLATION INSTRUCTIONS
1. THE EQUIPMENT IS SUITABLE FOR USE IN THE PRESENCE OF FLAMMABLE GASES AND VAPORS. FOR USE INDOORS OR OUTDOORS IN HAZARDOUS LOCATIONS AS FOLLOWS
HRT1:Ex db IIB+H2 T6 Gb; Ex tb IIIC T72°C Db; IP66
HIT–4: Ex db IIB T6 Gb; Ex tb IIIC T80°C Db; IP66
2. THE EQUIPMENT IS CERTIFIED FOR USE WITH AMBIENT TEMPERATURE RANGE OF –40°C TO 70°C FOR T1 THRU T6 FOR HRT1 SERIES
–40°C TO 78°C FOR T1 THRU T6 FOR HIT–4 SERIES
3. WHEN PROCESS TEMPERATURES ARE OUTSIDE THE MAXIMUM OR MINIMUM TEMPERATURE SPECIFIED BELOW THE RATE/TOTALIZER SHOULD BE MOUNTED AWAY FROM THE FLOWMETER.
HRT1 SERIES: PROCESS TEMPERATURE < –40°C OR > 70°C
HIT–4 SERIES: PROCESS TEMPERATURE < –40°C OR > 78°C
4. INSTALLATION SHALL BE PERFORMED BY TRAINED PERSONNEL IN ACCORDANCE WITH THE APPLICABLE CODE OF PRACTICE, NAMELY IEC 60079–14.
5. INSTRUMENT ENCLOSURE IS FURNISHED WITH M20 OR 3/4" NPT CONDUIT ENTRIES.
6. TIGHTEN THE COVER LOCKING SCREW TO PREVENT THE COVER FROM LOOSENING UNDER VIBRATION.
CONDITIONS FOR SAFE USE: ATEX/IECEx
1. DO NOT REMOVE THE COVER UNLESS AREA IS VOID OF COMBUSTIBLE GAS OR VAPORS.
2. SELECT AN INSTALLATION LOCATION SO THAT THE ENCLOSURE WILL NOT BE SUBJECTED TO IMPACT BY HEAVY OBJECTS.
3. ALL UNUSED CONDUIT ENTRIES MUST BE PLUGGED. PLUGS MUST BE ATEX/IECEx CERTIFIED Ex d PLUGS.
4. ALL CABLE/CONDUIT ENTRY DEVICES AND BLANKING PLUGS MUST BE CERTIFIED Ex d, SUITABLE FOR THE CONDITIONS OF USE AND CORRECTLY INSTALLED.
5. CONDUIT ENTRIES MUST BE SEALED AT THE ENCLOSURE WALL.
MARKING HRT1
Ex db IIB+H2 T6 Gb;
Ex tb IIIC T72°C Db; IP66
T1–T6: –40°C ≤ Ta ≤ 70°C
MARKING HIT–4
Ex db IIB T6 Gb;
Ex tb IIIC T80°C Db; IP66
T –T6: –40°C ≤ Ta ≤ 78°C
EARTH TERMINAL
M20 X 1.5 THD OR 3/4" NPT THD TYP 2 PLACES
HRT1/HIT4 RATE/TOTALIZER
3/4" NPT THD
UNION (CERTIFIED Ex d) SUCH AS KILLARK UNY2–EX OR EQUAL MALE TO FEMALE UNION (OPTIONAL).
WELDED THREADED RISER 4" OR 6" IN LENGTH
NOTE: AVAILABLE FLOWMETER SERIES: HO SERIES (LIQUID AND GAS), HP SERIES, API LIQUID SERIES, CT LIQUID SERIES, STAR INDUSTRIAL SERIES, GROOVED TURBINE SERIES AND WAFER SERIES (LIQUID AND GAS)
NOTE: FLOWMETER PROCESS FITTING AVAILABLE OPTIONS: MS FLARE PER MSS3656, NPT, FLANGED, GROOVED AND WAFER.
HOFFER FLOW CONTROLS, INC
ELIZABETH CITY, NC 27909
INSTALLATION DWG, ATEX/IECEx Ex d CERTIFIED XD–1win HRT1/HIT–4
CAGE CODE C 33321
DWG NO HIT4–913
REV B
SCALE NONE
SHEET 1 OF 1
DRAWN BALLANCE 150413
CHECK JLDETCO 150413
PROJ ENG JLDETCO 150413
MATERIAL
FINISH
UNLESS OTHERWISE SPECIFIED DIMENSIONS ARE IN INCHES. TOLERANCES ON THE SIZE OF BLANK MATERIAL SHALL BE:
± .01
3 PLACE DECIMALS ± .005
2 PLACE DECIMALS ± 1/64
ANGULAR ± 1/2°
CONFIDENTIAL PROPERTY OF HOFFER FLOW CONTROLS, INC. THIS DOCUMENT IS NOT TO BE REPRODUCED OR USED FOR ANY OTHER PURPOSE, NOR DISCLOSED TO OTHERS, WITHOUT PRIOR WRITTEN PERMISSION. ALL PARTS MUST BE RETURNED ON REQUEST.
NEXT ASSY
USED ON
APPLICATION
D C B A 1 2 3 4

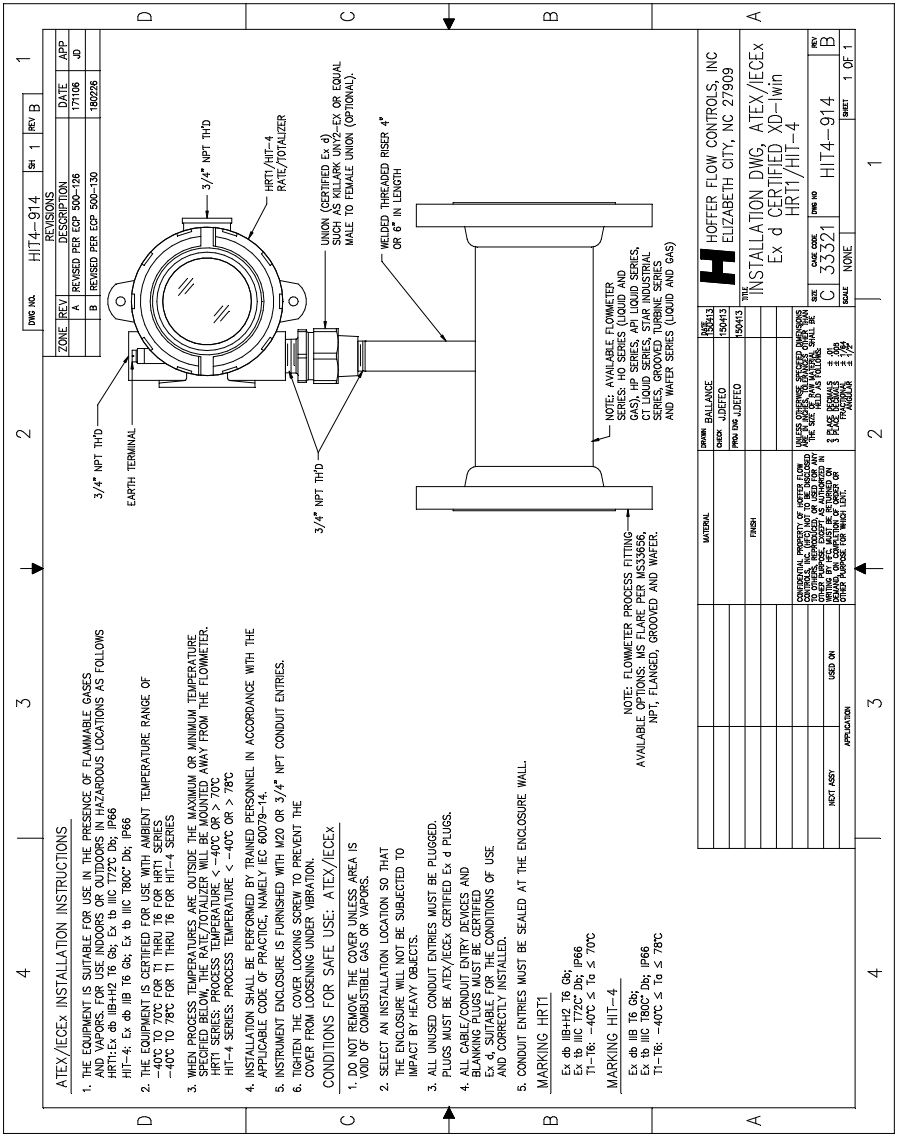
ATEX/IECEx INSTALLATION INSTRUCTIONS
1. THE EQUIPMENT IS SUITABLE FOR USE IN THE PRESENCE OF FLAMMABLE GASES AND VAPORS. FOR USE INDOORS OR OUTDOORS IN HAZARDOUS LOCATIONS AS FOLLOWS
HRT1:Ex db IIB+H2 T6 Gb; Ex tb IIIC T72°C Db; IP66
HIT-4: Ex db IIB T6 Gb; Ex tb IIIC T80°C Db; IP66
2. THE EQUIPMENT IS CERTIFIED FOR USE WITH AMBIENT TEMPERATURE RANGE OF
-40°C TO 70°C FOR T1 THRU T6 FOR HRT1 SERIES
-40°C TO 78°C FOR T1 THRU T6 FOR HIT-4 SERIES
3. WHEN PROCESS TEMPERATURES ARE OUTSIDE THE MAXIMUM OR MINIMUM TEMPERATURE SPECIFIED BELOW THE RATE/TOTALIZER SHOULD BE MOUNTED AWAY FROM THE FLOWMETER.
HRT1 SERIES: PROCESS TEMPERATURE < -40°C OR > 70°C
HIT-4 SERIES: PROCESS TEMPERATURE < -40°C OR > 78°C
4. INSTALLATION SHALL BE PERFORMED BY TRAINED PERSONNEL IN ACCORDANCE WITH THE APPLICABLE CODE OF PRACTICE, NAMELY IEC 60079-14.
5. INSTRUMENT ENCLOSURE IS FURNISHED WITH M20 OR 3/4" NPT CONDUIT ENTRIES.
6. TIGHTEN THE COVER LOCKING SCREW TO PREVENT THE COVER FROM LOOSENING UNDER VIBRATION.
CONDITIONS FOR SAFE USE: ATEX/IECEx
1. DO NOT REMOVE THE COVER UNLESS AREA IS VOID OF COMBUSTIBLE GAS OR VAPORS.
2. SELECT AN INSTALLATION LOCATION SO THAT THE ENCLOSURE WILL NOT BE SUBJECTED TO IMPACT BY HEAVY OBJECTS.
3. ALL UNUSED CONDUIT ENTRIES MUST BE PLUGGED. PLUGS MUST BE ATEX/IECEx CERTIFIED Ex d PLUGS.
4. ALL CABLE/CONDUIT ENTRY DEVICES AND BLANKING PLUGS MUST BE CERTIFIED Ex d, SUITABLE FOR THE CONDITIONS OF USE AND CORRECTLY INSTALLED.
5. CONDUIT ENTRIES MUST BE SEALED AT THE ENCLOSURE WALL.
MARKING HRT1
Ex db IIB+H2 T6 Gb;
Ex tb IIIC T72°C Db; IP66
T1-T6: -40°C ≤ Ta ≤ 70°C
MARKING HIT-4
Ex db IIB T6 Gb;
Ex tb IIIC T80°C Db; IP66
T1-T6: -40°C ≤ Ta ≤ 78°C
DWG NO. HIT4-914
SH 1
REV B
REVISIONS
ZONE REV DESCRIPTION DATE APP
A REVISED PER ECP 500-126 171106 JD
B REVISED PER ECP 500-130 180226
3/4" NPT Th'D
EARTH TERMINAL
3/4" NPT Th'D
HRT1/HIT-4 RATE/TOTALIZER
UNION (CERTIFIED Ex d) SUCH AS KILLARK UNY2-EX OR EQUAL MALE TO FEMALE UNION (OPTIONAL).
WELDED THREADED RISER 4" OR 6" IN LENGTH
3/4" NPT Th'D
NOTE: AVAILABLE FLOWMETER SERIES: HO SERIES (LIQUID AND GAS), HP SERIES, API LIQUID SERIES, CT LIQUID SERIES, STAR INDUSTRIAL SERIES, GROOVED TURBINE SERIES AND WAFER SERIES (LIQUID AND GAS)
NOTE: FLOWMETER PROCESS FITTING AVAILABLE OPTIONS: MS FLARE PER MSS3656, NPT, FLANGED, GROOVED AND WAFER.
MATERIAL
FINISH
DRAWN BALLANCE 150413
CHECK JUDITCO 150413
PROJ ENG JUDITCO 150413
CONFIDENTIAL PROPERTY OF HOFFER FLOW CONTROLS, INC. THIS DRAWING IS NOT TO BE REPRODUCED TO OTHERS, REPRODUCED OR USED FOR ANY OTHER PURPOSE WITHOUT PRIOR WRITTEN PERMISSION. ALL PARTS MUST BE RETURNED ON REQUEST. ALL PARTS MUST BE RETURNED ON WRITING BY HFC. ASSIST IN RETURNING OR DESTROY ALL COPIES OF THIS DRAWING OR WHICH CONTAIN THE SAME.
NEXT ASSY
USED ON
APPLICATION
UNLESS OTHERWISE SPECIFIED DIMENSIONS ARE IN INCHES. TOLERANCES ARE THE SAME AS THE MATERIAL SHALL BE.
3 PLACE DECIMALS ± .00
2 PLACE DECIMALS ± .010
1 PLACE DECIMALS ± .030
ANGULAR ± 1/2°
HOFFER FLOW CONTROLS, INC
ELIZABETH CITY, NC 27909
INSTALLATION DWG, ATEX/IECEx Ex d CERTIFIED XD-Iwin HRT1/HIT-4
SIZE C
CAGE CODE 33321
DWG NO HIT4-914
REV B
SCALE NONE
SHEET 1 OF 1

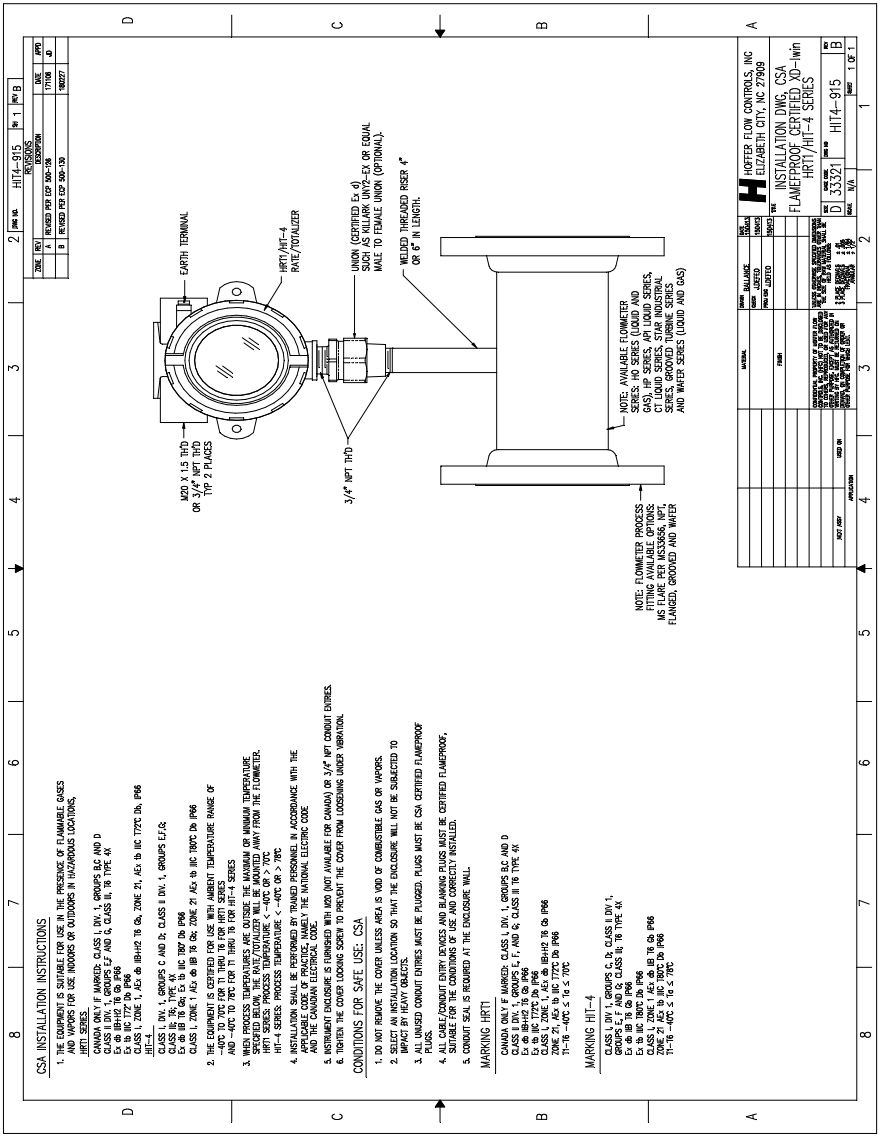
CSA INSTALLATION INSTRUCTIONS
1. THE EQUIPMENT IS SUITABLE FOR USE IN THE PRESENCE OF FLAMMABLE GASES AND VAPORS FOR USE INDOORS OR OUTDOORS IN HAZARDOUS LOCATIONS.
HRT1 SERIES.
CANADA ONLY IF MARKED: CLASS I, DIV. 1, GROUPS B,C AND D
CLASS II DIV. 1, GROUPS E,F AND G, CLASS III, T6 TYPE 4X
Ex d IIB T6 Gb; Ex tb IIIC T80°C Db IP66
CLASS I, ZONE 1 AEx d IIB T6 Gb; ZONE 21 AEx tb IIIC T72°C Db IP66
HIT-4
CLASS I, DIV. 1, GROUPS C AND D; CLASS II DIV. 1, GROUPS E,F,G.
CLASS III, T6 TYPE 4X
Ex d IIB T6 Gb; Ex tb IIIC T80°C Db IP66
CLASS I, ZONE 1 AEx d IIB T6 Gb; ZONE 21 AEx tb IIIC T80°C Db IP66
2. THE EQUIPMENT IS CERTIFIED FOR USE WITH AMBIENT TEMPERATURE RANGE OF -40°C TO 70°C FOR THRU T6 FOR HRT1 SERIES
3. WHEN PROCESS TEMPERATURES ARE OUTSIDE THE MAXIMUM OR MINIMUM TEMPERATURE SPECIFIED BELOW, THE FACTORY MUST BE NOTIFIED WHEN ORDERING THE FLOWMETER.
HRT1 SERIES: PROCESS TEMPERATURE < -40°C OR > 70°C
HIT-4 SERIES: PROCESS TEMPERATURE < -40°C OR > 70°C
4. INSTALLATION SHALL BE PERFORMED BY TRAINED PERSONNEL IN ACCORDANCE WITH THE APPLICABLE CODE OF PRACTICE, NAMELY THE NATIONAL ELECTRIC CODE
5. INSTRUMENT ENCLOSURE IS EQUIPPED WITH M20 (NOT AVAILABLE FOR CANADA) OR 3/4" NPT CONDUIT ENTRIES.
6. TIGHTEN THE COVER LOCKING SCREW TO PREVENT THE COVER FROM LOOSENING UNDER VIBRATION.
CONDITIONS FOR SAFE USE: CSA
1. DO NOT REMOVE THE COVER UNLESS AREA IS VOID OF COMBUSTIBLE GAS OR VAPORS.
2. SELECT AN INSTALLATION LOCATION SO THAT THE ENCLOSURE WILL NOT BE SUBJECTED TO IMPACT BY HEAVY OBJECTS.
3. ALL UNUSED CONDUIT ENTRIES MUST BE PLUGGED, PLUGS MUST BE CSA CERTIFIED FLAMEPROOF PLUGS.
4. ALL CABLE/CONDUIT ENTRY DEVICES AND BLANKING PLUGS MUST BE CERTIFIED FLAMEPROOF, SUITABLE FOR THE CONDITIONS OF USE AND PROPERLY INSTALLED.
5. CONDUIT SEAL IS REQUIRED AT THE ENCLOSURE WALL.
MARKING HRT1
CANADA ONLY IF MARKED: CLASS I, DIV. 1, GROUPS B,C AND D
CLASS II DIV. 1, GROUPS E, F, AND G, CLASS III T6 TYPE 4X
Ex d IIB T6 Gb; Ex tb IIIC T80°C Db IP66
CLASS I, ZONE 1, AEx d IIB T6 Gb; ZONE 21, AEx tb IIIC T72°C Db IP66
MARKING HIT-4
CLASS I, DIV 1, GROUPS C, D; CLASS II DIV 1, GROUPS E, F, AND G; CLASS III, T6 TYPE 4X
Ex d IIB T6 Gb IP66
Ex tb IIIC T80°C Db IP66
CLASS I, ZONE 1, AEx d IIB T6 Gb IP66
ZONE 21, AEx tb IIIC T80°C Db IP66
T1-T6 -40°C ≤ Ta ≤ 70°C
EARTH TERMINAL
HRT1/HIT-4 RATE/TOTALIZER
UNION (CERTIFIED Ex d) SUCH AS KILLARK UNY2-EX OR EQUAL MALE TO FEMALE UNION (OPTIONAL).
WELDED THREADED RISER 4" OR 6" IN LENGTH.
M20 X 1.5 THD OR 3/4" NPT THD TYP 2 PLACES
3/4" NPT THD
NOTE: AVAILABLE FLOWMETER SERIES: VO SERIES (LIQUID AND GAS), HP SERIES, AP LIQUID SERIES, CT LIQUID SERIES, STAR INDUSTRIAL SERIES, GROOVED TURBINE SERIES AND WATER SERIES (LIQUID AND GAS)
NOTE: FLOWMETER PROCESS CONNECTIONS ARE OPTIONAL AVAILABLE OPTIONS: MS FLARE PER MSS-B6, NPT, FLANGED, GROOVED AND WATER
HOFFER FLOW CONTROLS, INC
ELIZABETH CITY, NC 27909
INSTALLATION DWG, CSA
FLAMEPROOF CERTIFIED, XD-Iwin
HRT1/HIT-4 SERIES
HIT4-915
D 33321
N/A
1 OF 1
B

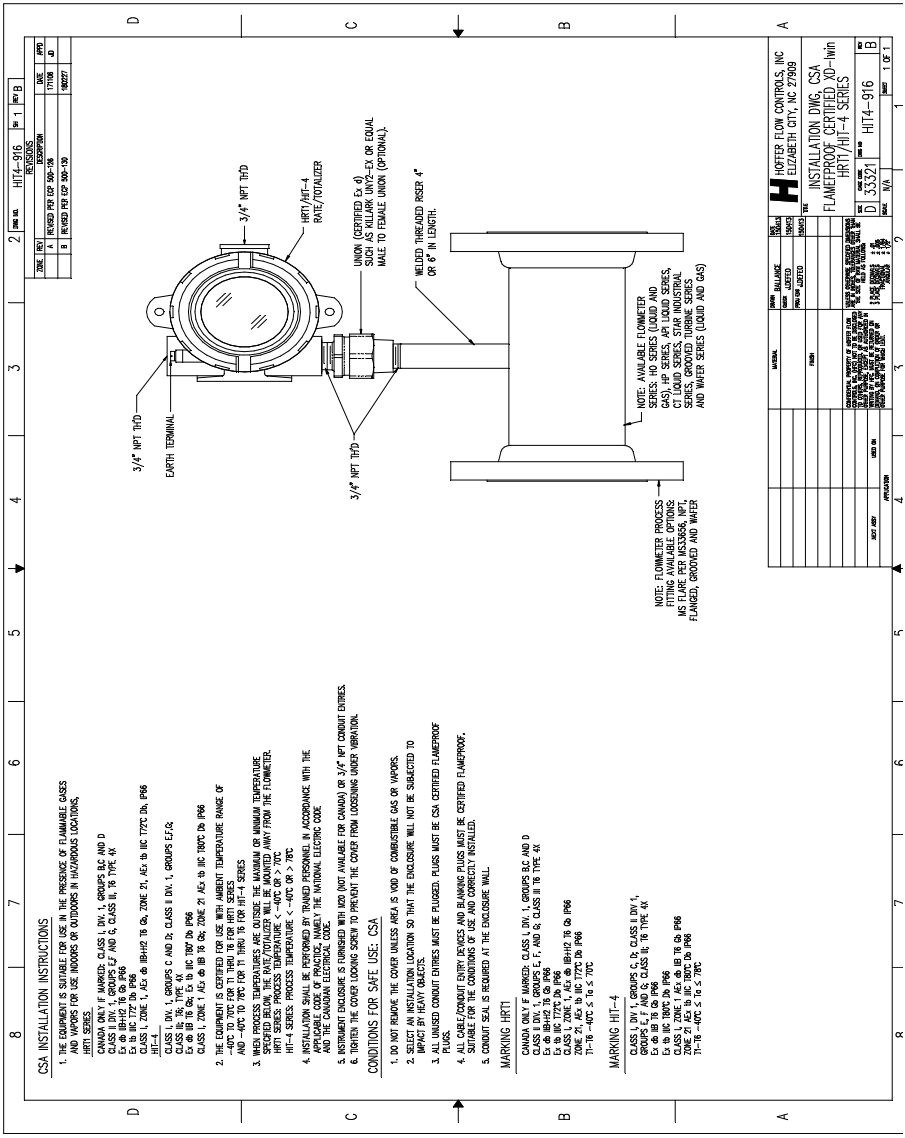
CSA INSTALLATION INSTRUCTIONS
1. THE EQUIPMENT IS SUITABLE FOR USE IN THE PRESENCE OF FLAMMABLE GASES AND VAPORS FOR USE INDOORS IN HAZARDOUS LOCATIONS.
HRT1 SERIES:
CANADA ONLY IF MARKED: CLASS I, DIV. 1, GROUPS B,C AND D
CLASS II DIV. 1, GROUPS E,F AND G, CLASS III, T6 TYPE 4X
Ex db IIB+H2 T6 Db IP66
Ex tb IIIC T72°C Db IP66
CLASS I, ZONE 1, AEx db IIB+H2 T6 Ga, ZONE 21, AEx tb IIIC T72°C Db, IP66
HIT-4
CLASS I, DIV. 1, GROUPS C AND D, CLASS II DIV. 1, GROUPS E,F,G.
CLASS III T6 TYPE 4X
Ex db IIB T6 Ga, Ex tb IIIC T80°C Db IP66
CLASS I, ZONE 1 AEx db IIB T6 Ga, ZONE 21 AEx tb IIIC T80°C Db IP66
2. THE EQUIPMENT IS CERTIFIED FOR USE WITH AMBIENT TEMPERATURE RANGE OF -40°C TO 70°C FOR T1 THRU T6 FOR HRT1 SERIES
AND -40°C TO 78°C FOR T1 THRU T6 FOR HIT-4 SERIES
3. WHEN PROCESS TEMPERATURES ARE OUTSIDE THE MAXIMUM OR MINIMUM TEMPERATURE SPECIFIED BELOW, THE RATE/TOTALIZER WILL BE MOUNTED AWAY FROM THE FLOWMETER.
HRT1 SERIES: PROCESS TEMPERATURE < -40°C OR > 70°C
HIT-4 SERIES: PROCESS TEMPERATURE < -40°C OR > 78°C
4. INSTALLATION SHALL BE PERFORMED BY TRAINED PERSONNEL IN ACCORDANCE WITH THE APPLICABLE CODES OF PRACTICE. IN CANADA, THE NATIONAL ELECTRIC CODE AND THE CANADIAN ELECTRICAL CODE.
5. INSTRUMENT ENCLOSURE IS FURNISHED WITH M20 (NOT AVAILABLE FOR CANADA) OR 3/4" NPT CONDUIT ENTRIES.
6. TIGHTEN THE COVER LOCKING SCREW TO PREVENT THE COVER FROM LOOSENING UNDER VIBRATION.
CONDITIONS FOR SAFE USE: CSA
1. DO NOT REMOVE THE COVER UNLESS AREA IS VOID OF COMBUSTIBLE GAS OR VAPORS.
2. SELECT AN INSTALLATION LOCATION SO THAT THE ENCLOSURE WILL NOT BE SUBJECTED TO IMPACT BY HEAVY OBJECTS.
3. ALL UNUSED CONDUIT ENTRIES MUST BE PLUGGED. PLUGS MUST BE CSA CERTIFIED FLAMEPROOF PLUGS.
4. ALL CABLE/CONDUIT ENTRY DEVICES AND BLANKING PLUGS MUST BE CERTIFIED FLAMEPROOF, SUITABLE FOR THE CONDITIONS OF USE AND PROPERLY INSTALLED.
5. CONDUIT SEAL IS REQUIRED AT THE ENCLOSURE WALL.
MARKING HRT1
CANADA ONLY IF MARKED: CLASS I, DIV. 1, GROUPS B,C AND D
CLASS II DIV. 1, GROUPS E, F, AND G; CLASS III T6 TYPE 4X
Ex db IIB+H2 T6 Db IP66
Ex tb IIIC T72°C Db IP66
CLASS I, ZONE 1, AEx db IIB+H2 T6 Db IP66
ZONE 21, AEx tb IIIC T72°C Db IP66
T1-T6 -40°C ≤ ta ≤ 70°C
MARKING HIT-4
CLASS I, DIV 1, GROUPS C, D; CLASS II DIV 1, GROUPS E, F AND G; CLASS III, T6 TYPE 4X
Ex db IIB T6 Ga
Ex tb IIIC T80°C Db IP66
CLASS I, ZONE 1 AEx db IIB T6 Db IP66
ZONE 21 AEx tb IIIC T80°C Db IP66
T1-T6 -40°C ≤ ta ≤ 78C
3/4" NPT TYPD
EARTH TERMINAL
3/4" NPT TYPD
HRT1/HIT-4 RATE/TOTALIZER
UNION (CERTIFIED Ex d) SUCH AS KILLARK UNY2-EX OR EQUAL MALE TO FEMALE UNION (OPTIONAL).
WELDED THREADED RISER 4" OR 6" IN LENGTH.
NOTE: AVAILABLE FLOWMETER SERIES: HO SERIES (LIQUID AND GAS), HP SERIES, API LIQUID SERIES, CT LIQUID SERIES, STAR INDUSTRIAL SERIES, GROOVED TURBINE SERIES AND WATER SERIES (LIQUID AND GAS)
NOTE: FLOWMETER PROCESS FITTING AVAILABLE OPTIONS: WELDED RISER, NPT, FLANGED, GROOVED AND WAFER
REVISIONS
REV B
HOFFER FLOW CONTROLS, INC
ELIZABETH CITY, NC 27909
INSTALLATION DWG, CSA
FLAMEPROOF CERTIFIED XD-Twin
HRT1/HIT-4 SERIES
HIT4-916
D 33321
N/A
SHEET 1 OF 1

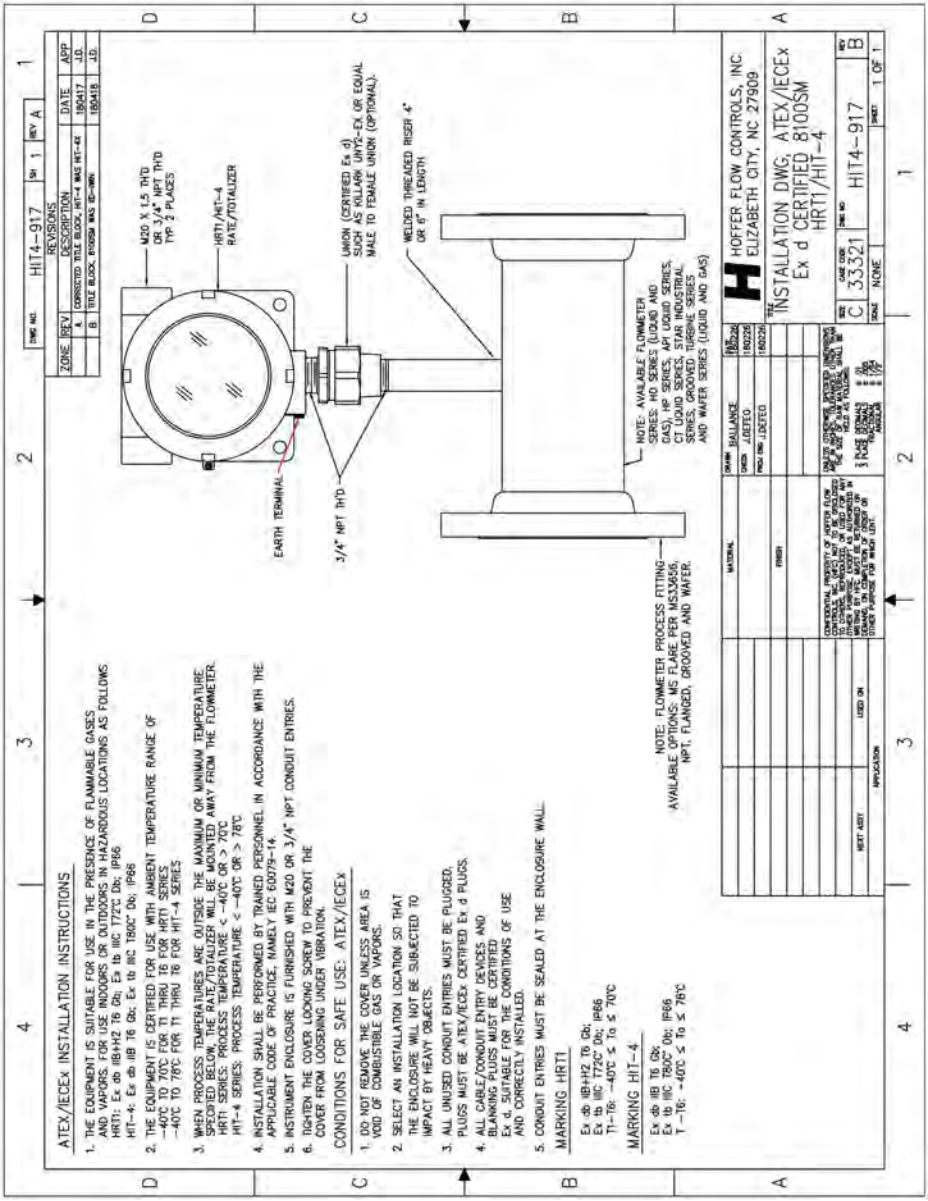
ATEX/IECEx INSTALLATION INSTRUCTIONS
1. THE EQUIPMENT IS SUITABLE FOR USE IN THE PRESENCE OF FLAMMABLE GASES AND VAPORS. FOR USE INDOORS OR OUTDOORS IN HAZARDOUS LOCATIONS AS FOLLOWS:
HRT1: Ex db IIB+H2 T6 Gb; Ex tb IIIC T72C Db; IP66
HIT-4: Ex db IIB T6 Gb; Ex tb IIIC T80C Db; IP66
2. THE EQUIPMENT IS CERTIFIED FOR USE WITH AMBIENT TEMPERATURE RANGE OF -40°C TO 70°C FOR T1 THRU T6 FOR HRT1 SERIES
-40°C TO 78°C FOR T1 THRU T6 FOR HIT-4 SERIES
3. WHEN PROCESS TEMPERATURES ARE OUTSIDE THE MAXIMUM OR MINIMUM TEMPERATURE SPECIFIED BELOW, THE RATE/TOTALIZER WILL BE MOUNTED AWAY FROM THE FLOWMETER.
HRT1 SERIES: PROCESS TEMPERATURE < -40°C OR > 70°C
HIT-4 SERIES: PROCESS TEMPERATURE < -40°C OR > 78°C
4. INSTALLATION SHALL BE PERFORMED BY TRAINED PERSONNEL IN ACCORDANCE WITH THE APPLICABLE CODE OF PRACTICE, NAMELY IEC 60079-14.
5. INSTRUMENT ENCLOSURE IS FURNISHED WITH M20 OR 3/4" NPT CONDUIT ENTRIES.
6. TIGHTEN THE COVER LOCKING SCREW TO PREVENT THE COVER FROM LOOSENING UNDER VIBRATION.
CONDITIONS FOR SAFE USE: ATEX/IECEx
1. DO NOT REMOVE THE COVER UNLESS AREA IS VOID OF COMBUSTIBLE GAS OR VAPORS.
2. SELECT AN INSTALLATION LOCATION SO THAT THE ENCLOSURE WILL NOT BE SUBJECTED TO IMPACT BY HEAVY OBJECTS.
3. ALL UNUSED CONDUIT ENTRIES MUST BE PLUGGED. PLUGS MUST BE ATEX/IECEx CERTIFIED Ex d PLUGS.
4. ALL CABLE/CONDUIT ENTRY DEVICES AND BLANKING PLUGS MUST BE CERTIFIED Ex d, SUITABLE FOR THE CONDITIONS OF USE AND CORRECTLY INSTALLED.
5. CONDUIT ENTRIES MUST BE SEALED AT THE ENCLOSURE WALL.
MARKING HRT1
Ex db IIB+H2 T6 Gb;
Ex tb IIIC T72C Db; IP66
T1–T6: -40°C ≤ Ta ≤ 70°C
MARKING HIT-4
Ex db IIB T6 Gb;
Ex tb IIIC T80C Db; IP66
T1–T6: -40°C ≤ Ta ≤ 78°C
M20 X 1.5 THD OR 3/4" NPT THD TYP 2 PLACES
HRT1/HIT-4 RATE/TOTALIZER
UNION (CERTIFIED Ex d) SUCH AS KILLARK UHY2-EX OR EQUAL MALE TO FEMALE UNION (OPTIONAL).
WELDED THREADED RISER 4" OR 6" IN LENGTH
EARTH TERMINAL
3/4" NPT THD
NOTE: AVAILABLE FLOWMETER SERIES: HO SERIES (LIQUID AND GAS), HP SERIES, API LIQUID SERIES, CT LIQUID SERIES, STEAM SERIES, GROOVED TURBINE SERIES, AND WAFER SERIES (LIQUID AND GAS)
NOTE: FLOWMETER PROCESS FITTING AVAILABLE OPTIONS: MS FLARE PER MS33656, NPT, FLANGED, GROOVED AND WAFER.
HOFFER FLOW CONTROLS, INC.
ELIZABETH CITY, NC 27909
INSTALLATION DWG, ATEX/IECEx Ex d CERTIFIED 8100SM HRT1/HIT-4
C 33321 HIT4-917 B
SCALE NONE
SHEET 1 OF 1

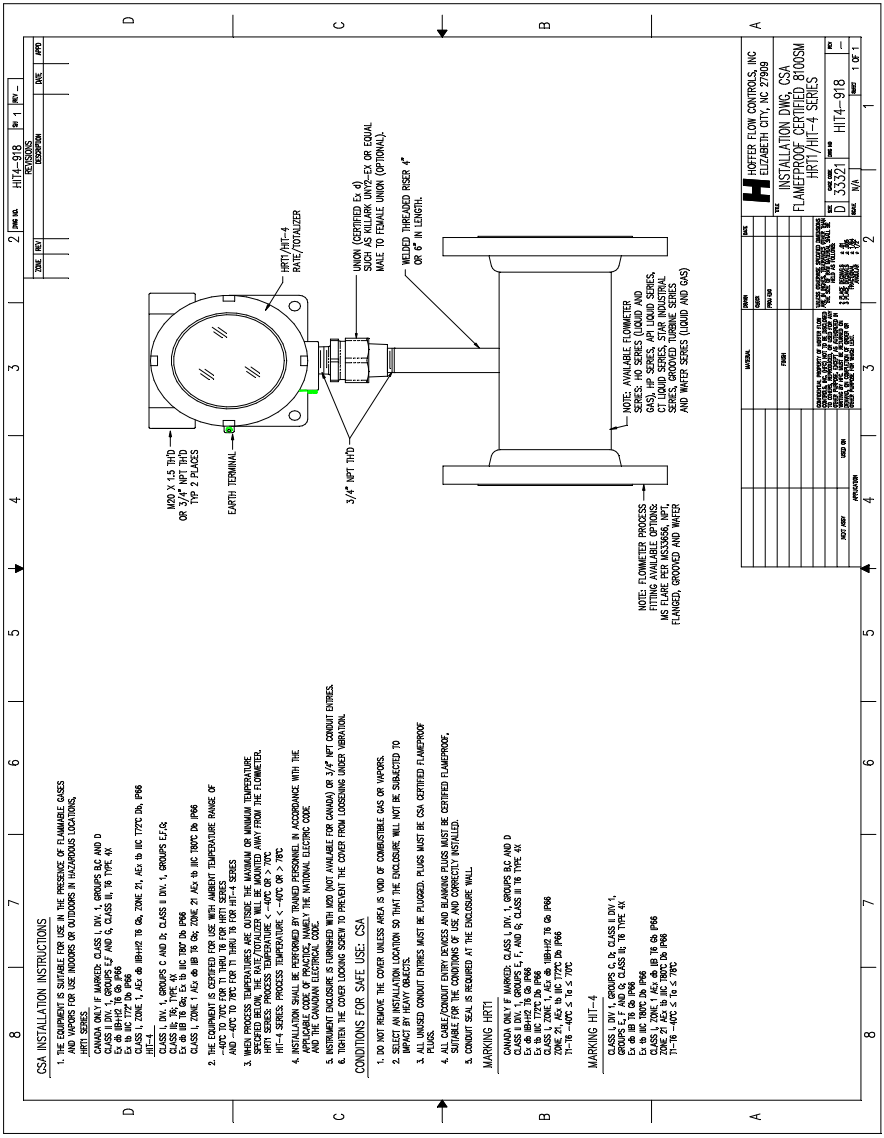
CSA INSTALLATION INSTRUCTIONS
1. THE EQUIPMENT IS SUITABLE FOR USE IN THE PRESENCE OF FLAMMABLE GASES AND VAPORS FOR USE INDOORS OR OUTDOORS IN HAZARDOUS LOCATIONS.
HRT1 SERIES
CANADA ONLY IF MARKED: CLASS I, DIV. 1, GROUPS B,C AND D
CLASS II DIV. 1, GROUPS E,F AND G, CLASS III, T6 TYPE 4X
Ex ib IIB+H2 T6 Gb IP66
Ex ia IIC T72°C Da IP66
CLASS I, ZONE 1 AEx ib IIB+H2 T6 Gb, ZONE 21, AEx tb IIC T72°C Db, IP66
HIT-4
CLASS I, DIV. 1, GROUPS C AND D, CLASS II DIV. 1, GROUPS E,F,G.
Ex ia IIB T6 Ga, T5 Gb
Ex ia IIC T6 Ga, T5 Gb IIC T80° Db IP66
CLASS I, ZONE 1 AEx ib IIB T6 Gb, ZONE 21 AEx tb IIC T80°C Db IP66
2. THE EQUIPMENT IS CERTIFIED FOR USE WITH AMBIENT TEMPERATURE RANGE OF -40°C TO 70°C FOR T1 THRU T6 FOR HRT1 SERIES AND -40°C TO 78°C FOR T1 THRU T6 FOR HIT-4 SERIES
3. WHEN PROCESS TEMPERATURES ARE OUTSIDE THE MAXIMUM OR MINIMUM TEMPERATURE SPECIFIED BELOW, THE FALT/TOTALIZER MUST BE MOUNTED AWAY FROM THE FLOWMETER.
HRT1 SERIES: PROCESS TEMPERATURE < -40°C OR > 70°C
HIT-4 SERIES: PROCESS TEMPERATURE < -40°C OR > 78°C
4. INSTALLATION SHALL BE PERFORMED BY TRAINED PERSONNEL IN ACCORDANCE WITH THE APPLICABLE CODE OF PRACTICE, NAMELY THE NATIONAL ELECTRIC CODE AND THE CANADIAN ELECTRICAL CODE.
5. INSTRUMENT ENCLOSURE IS FURNISHED WITH M20 (NOT AVAILABLE FOR CANADA) OR 3/4" NPT CONDUIT ENTRIES.
6. TIGHTEN THE COVER LOCKING SCREW TO PREVENT THE COVER FROM LOOSENING UNDER VIBRATION.
CONDITIONS FOR SAFE USE: CSA
1. DO NOT REMOVE THE COVER UNLESS AREA IS VOID OF COMBUSTIBLE GAS OR VAPORS.
2. SELECT AN INSTALLATION LOCATION SO THAT THE ENCLOSURE WILL NOT BE SUBJECTED TO IMPACT BY HEAVY OBJECTS.
3. ALL UNUSED CONDUIT ENTRIES MUST BE PLUGGED. PLUGS MUST BE CSA CERTIFIED FLAMEPROOF PLUGS.
4. ALL CABLE/CONDUIT ENTRY DEVICES AND BLANKING PLUGS MUST BE CERTIFIED FLAMEPROOF, SUITABLE FOR THE CONDITIONS OF USE, AND CORRECTLY INSTALLED.
5. CONDUIT SEAL IS REQUIRED AT THE ENCLOSURE WALL.
MARKING HRT1
CANADA ONLY IF MARKED: CLASS I, DIV. 1, GROUPS B,C AND D
CLASS II DIV. 1, GROUPS E, F, AND G, CLASS III T6 TYPE 4X
Ex ib IIB+H2 T6 Gb IP66
Ex ia IIC T72°C Da IP66
CLASS I, ZONE 1 AEx ib IIB+H2 T6 Gb IP66
ZONE 21, AEx tb IIC T72°C Db IP66
MARKING HIT-4
CLASS I, DIV 1, GROUPS C, D, CLASS II DIV 1, GROUPS E, F, AND G, CLASS III, T6 TYPE 4X
Ex ia IIB T6 Ga, T5 Gb
Ex ia IIC T6 Ga, T5 Gb IIC T80°C Da IP66
CLASS I, ZONE 1 AEx ib IIB T6 Gb IP66
ZONE 21 AEx tb IIC T80°C Db IP66
T1-T6 -40°C ≤ Ta ≤ 70°C
M20 X 1.5 THD OR 3/4" NPT THD TYP 2 PLACES
EARTH TERMINAL
HRT1/HIT-4 RATE/TOTALIZER
3/4" NPT THD
UNION (CERTIFIED Ex d) SIZE AS REQUIRED (VARY WITH FLOW) OR EQUAL MALE TO FEMALE UNION (OPTIONAL).
WELDED THREADED RISER 4" OR 6" IN LENGTH.
NOTE: AVAILABLE FLOWMETER SERIES: HO SERIES LIQUID AND GASS, HP SERIES, API LIQUID SERIES, CT LIQUID SERIES, STAR INDUSTRIAL SERIES, GROOVED TURBINE SERIES AND WATER SERIES (LIQUID AND GAS)
NOTE: FLOWMETER PROCESS FITTING AVAILABLE OPTIONS: MS FLARE, PER MSS-SP-58, NPT, FLANGED, GROOVED AND WATER
HOFFER FLOW CONTROLS, INC
ELIZABETH CITY, NC 27909
INSTALLATION DWG. CSA
FLAMEPROOF CERTIFIED 8100SM
HRT1/HIT-4 SERIES
D 33321
HIT4-918
SCALE N/A
SHEET 1 OF 1
HIT4-918
REVISIONS
ZONE REV DESCRIPTION DATE APPD
DWG NO. HIT4-918 Rev 1 REV --

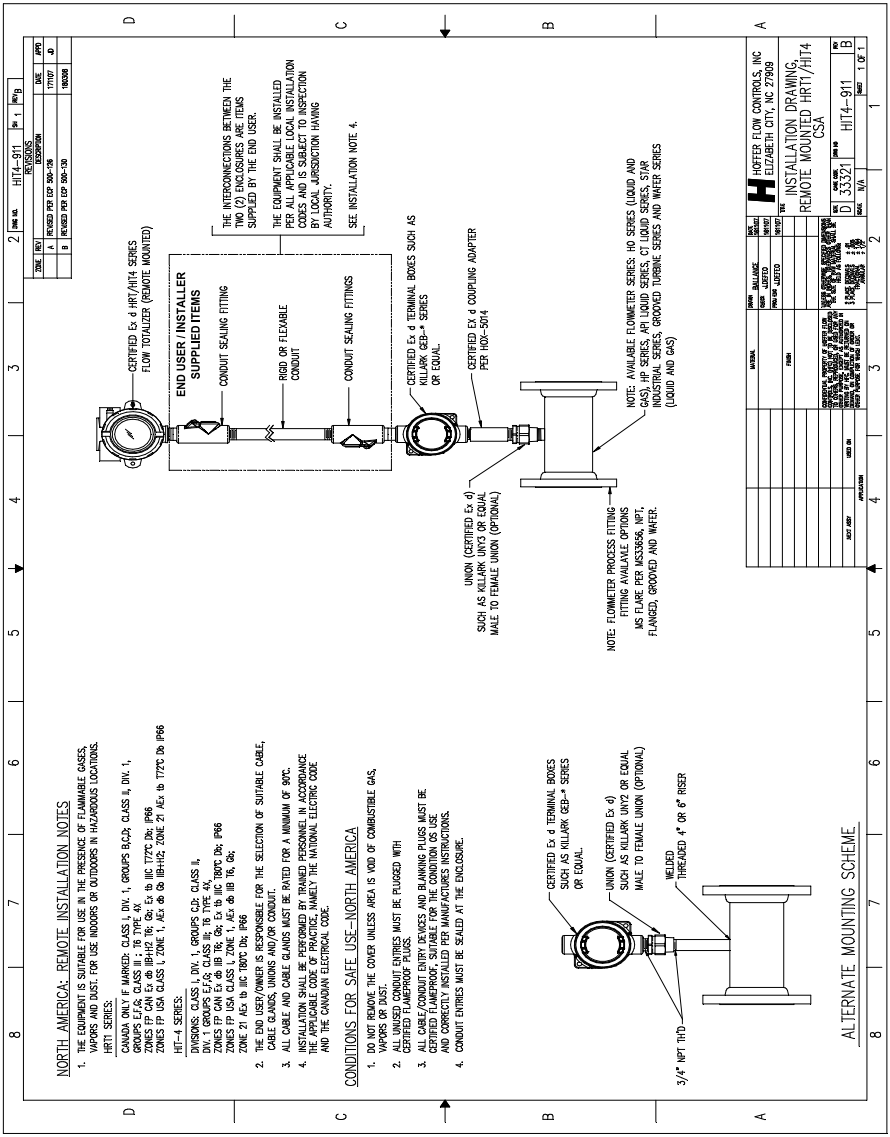
NORTH AMERICA: REMOTE INSTALLATION NOTES
1. THE EQUIPMENT IS SUITABLE FOR USE IN THE PRESENCE OF FLAMMABLE GASSES, VAPORS AND DUST. FOR USE INDOORS OR OUTDOORS IN HAZARDOUS LOCATIONS.
HRT1 SERIES:
CANADA ONLY F MARKED: CLASS I, DIV. 1, GROUPS B,C,D; CLASS II, DIV. 1, GROUPS E,F,G; CLASS III, 1 TB TYPE 4X
ZONES EPCAN CLASS I, ZONE 1, Ex d ib IIC T72°C Db; IP66
ZONES EP IGA CLASS I, ZONE 21, AEx tb IIIC T72°C Db IP66
ZONES EP IGA CLASS I, ZONE 1, AEx db ib IIB+H2; ZONE 21 AEx tb T72°C Db IP66
HIT-4 SERIES:
DIVISIONS: CLASS I, DIV. 1, GROUPS C,D; CLASS II, DIVISIONS 1 GROUPS E,F,G; CLASS III, 1 TB TYPE 4X
ZONES EPCAN CLASS I, ZONE 1, Ex d ib IIC T80°C Db; IP66
ZONES EP IGA CLASS I, ZONE 1, AEx db IIB T6, Gb;
ZONE 21 AEx tb IIIC T80°C Db; IP66
2. THE END USER/OWNER IS RESPONSIBLE FOR THE SELECTION OF SUITABLE CABLE, CABLE GLANDS, UNIONS AND/OR CONDUIT.
3. ALL CABLE AND CABLE GLANDS MUST BE RATED FOR A MINIMUM OF 90°C.
4. INSTALLATION SHALL BE PERFORMED BY TRAINED PERSONNEL IN ACCORDANCE THE APPLICABLE CODE OF PRACTICE, NAMELY THE NATIONAL ELECTRIC CODE AND THE CANADIAN ELECTRICAL CODE.
CONDITIONS FOR SAFE USE–NORTH AMERICA
1. DO NOT REMOVE THE COVER UNLESS AREA IS VOID OF COMBUSTIBLE GAS, VAPORS OR DUST.
2. ALL UNUSED CONDUIT ENTRIES MUST BE PLUGGED WITH CERTIFIED FLAMEPROOF PLUGS.
3. ALL CABLE/CONDUIT ENTRY DEVICES AND BLANKING PLUGS MUST BE CERTIFIED FLAMEPROOF, SUITABLE FOR THE CONDITION OF USE AND CORRECTLY INSTALLED PER MANUFACTURES INSTRUCTIONS.
4. CONDUIT ENTRIES MUST BE SEALED AT THE ENCLOSURE.
ALTERNATE MOUNTING SCHEME
CERTIFIED Ex d TERMINAL BOXES SUCH AS KILLARK GEB-* SERIES OR EQUAL.
UNION (CERTIFIED Ex d) SUCH AS KILLARK UNY3 OR EQUAL MALE TO FEMALE UNION (OPTIONAL)
WELDED THREADED 4" OR 6" RISER
3/4" NPT TWD
END USER / INSTALLER SUPPLIED ITEMS
CERTIFIED Ex d HRT/HIT4 SERIES FLOW TOTALIZER (REMOTE MOUNTED)
CONDUIT SEALING FITTING
RIGID OR FLEXIBLE CONDUIT
CONDUIT SEALING FITTINGS
CERTIFIED Ex d TERMINAL BOXES SUCH AS KILLARK GEB-* SERIES OR EQUAL.
CERTIFIED Ex d COUPLING ADAPTER PER HOX-5014
UNION (CERTIFIED Ex d) SUCH AS KILLARK UNY3 OR EQUAL MALE TO FEMALE UNION (OPTIONAL)
THE INTERCONNECTIONS BETWEEN THE TWO (2) ENCLOSURES ARE ITEMS SUPPLIED BY THE END USER.
THE EQUIPMENT SHALL BE INSTALLED PER ALL APPLICABLE INSTALLATION CODES AND IS SUBJECT TO INSPECTION BY LOCAL JURISDICTION HAVING AUTHORITY.
SEE INSTALLATION NOTE 4.
NOTE: AVAILABLE FLOWMETER SERIES: HO SERIES (LIQUID AND GAS), HP SERIES, API LIQUID SERIES, CT LIQUID SERIES, STAR INDUSTRIAL SERIES, GROOVED TURBINE SERIES AND WAFER SERIES (LIQUID AND GAS)
NOTE: FLOWMETER PROCESS FITTING FITTING AVAILABLE OPTIONS MS FLARE PER MSS3456, NPT, FLANGED, GROOVED AND WAFER.
HOFFER FLOW CONTROLS, INC
ELIZABETH CITY, NC 27909
INSTALLATION DRAWING, REMOTE MOUNTED HRT1/HIT4 CSA
D 33321
HIT4–911
B
SCALE N/A
SHEET 1 OF 1

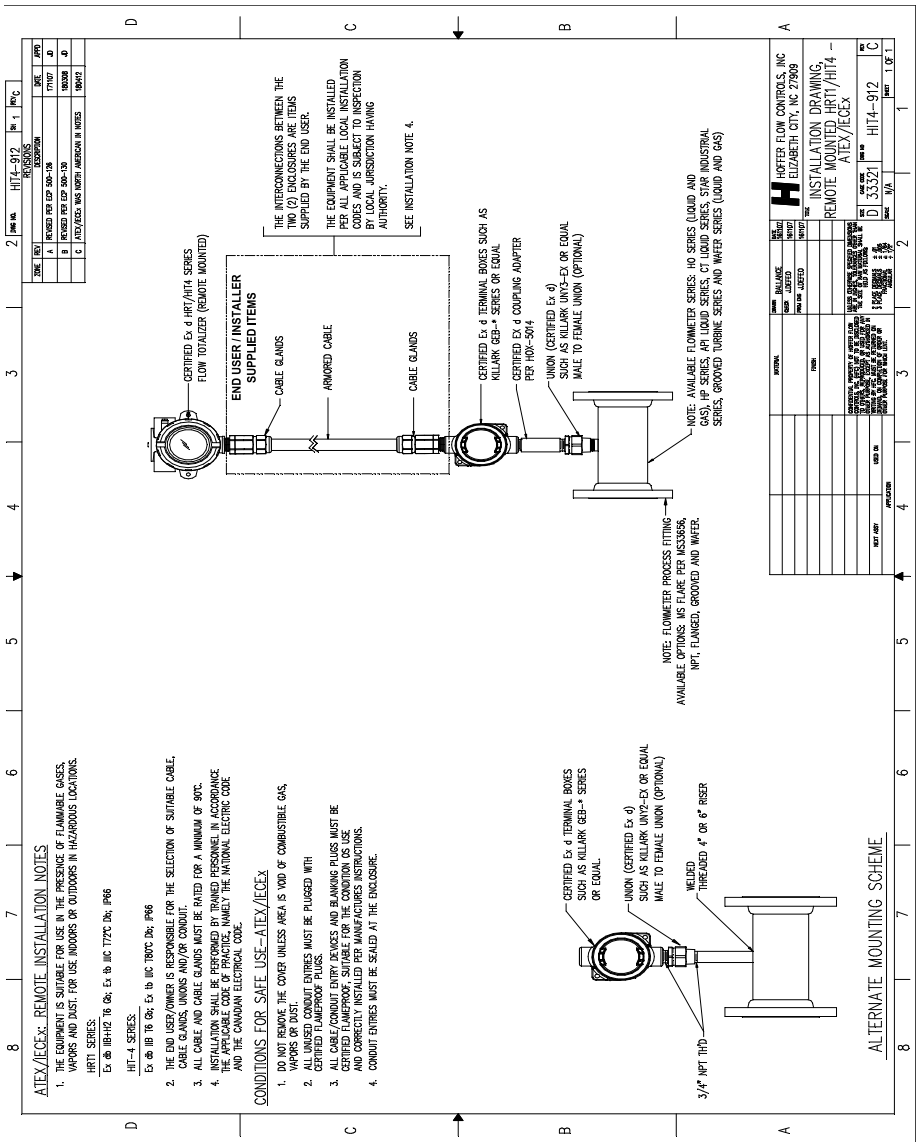
ATEX/IECEx: REMOTE INSTALLATION NOTES
1. THE EQUIPMENT IS SUITABLE FOR USE IN THE PRESENCE OF FLAMMABLE GASES, VAPORS AND DUST. FOR USE, INDOORS OR OUTDOORS IN HAZARDOUS LOCATIONS.
HRT1 SERIES:
Ex db IIB+H2 T6 Ga; Ex tb IIIC T72°C Db; IP66
HIT-4 SERIES:
Ex db IIB T6 Ga; Ex tb IIIC T80°C Db; IP66
2. THE END USER/OWNER IS RESPONSIBLE FOR THE SELECTION OF SUITABLE CABLE, CABLE GLANDS, UNIONS AND/OR CONDUIT.
3. ALL CABLE AND CABLE GLANDS MUST BE RATED FOR A MINIMUM OF 90°C.
4. INSTALLATION SHALL BE PERFORMED BY TRAINED PERSONNEL IN ACCORDANCE. THE APPLICABLE CODE OF PRACTICE, NAMELY THE NATIONAL ELECTRIC CODE AND THE CANADIAN ELECTRICAL CODE.
CONDITIONS FOR SAFE USE–ATEX/IECEx
1. DO NOT REMOVE THE COVER UNLESS AREA IS VOID OF COMBUSTIBLE GAS, VAPORS OR DUST.
2. ALL UNUSED CONDUIT ENTRIES MUST BE PLUGGED WITH CERTIFIED FLAMEPROOF PLUGS.
3. ALL CABLE/CONDUIT ENTRY DEVICES AND BLANKING PLUGS MUST BE CERTIFIED FLAMEPROOF, SUITABLE FOR THE CONDITION OF USE AND CORRECTLY INSTALLED TO MAINTAIN THE IP RATING OF THE ENCLOSURE.
4. CONDUIT ENTRIES MUST BE SEALED AT THE ENCLOSURE.
CERTIFIED Ex d HRT1/HIT4 SERIES FLOW TOTALIZER (REMOTE MOUNTED)
END USER / INSTALLER SUPPLIED ITEMS
CABLE GLANDS
ARMORED CABLE
CABLE GLANDS
THE INTERCONNECTIONS BETWEEN THE TWO (2) ENCLOSURES ARE ITEMS SUPPLIED BY THE END USER.
THE EQUIPMENT SHALL BE INSTALLED PER ALL APPLICABLE LOCAL INSTALLATION CODES AND IS SUBJECT TO INSPECTION BY LOCAL JURISDICTION HAVING AUTHORITY.
SEE INSTALLATION NOTE 4.
CERTIFIED Ex d TERMINAL BOXES SUCH AS KILLARK GEB-* SERIES OR EQUAL
CERTIFIED Ex d COUPLING ADAPTER PER HOX-5014
UNION (CERTIFIED Ex d) SUCH AS KILLARK UNY3-EX OR EQUAL MALE TO FEMALE UNION (OPTIONAL)
NOTE: AVAILABLE FLOWMETER SERIES: HO SERIES (LIQUID AND GAS), HP SERIES, API LIQUID SERIES, CT LIQUID SERIES, STAR INDUSTRIAL SERIES, GROOVED TURBINE SERIES AND WAFER SERIES (LIQUID AND GAS)
NOTE: FLOWMETER PROCESS FITTING AVAILABLE OPTIONS: MS FLARE PER MSS3685, NPT, FLANGED, GROOVED AND WAFER.
CERTIFIED Ex d TERMINAL BOXES SUCH AS KILLARK GEB-* SERIES OR EQUAL.
UNION (CERTIFIED Ex d) SUCH AS KILLARK UNY2-EX OR EQUAL MALE TO FEMALE UNION (OPTIONAL)
WELDED THREADED 4" OR 6" RISER
3/4" NPT THD
ALTERNATE MOUNTING SCHEME
HIT4-912
REVISIONS
ZONE REV DESCRIPTION DATE APPD
A BONDED PER ECP 509-136 17NOV D
B BONDED PER ECP 509-138 18NOV D
C ATEX/IECEx WAS NORTH AMERICAN IN NOTES 18NOV
HIGHFIELD FLOW CONTROLS, INC
ELIZABETH CITY, NC 27909
INSTALLATION DRAWING, REMOTE MOUNTED HRT1/HIT4 – ATEX/IECEx
D 33321
HIT4-912
C
SCALE N/A
SHEET 1 OF 1