ACC-42

RF Coil Flow Rate Conditioner
Frequency to Analog Voltage
(DC Powered Version)

USER'S MANUAL

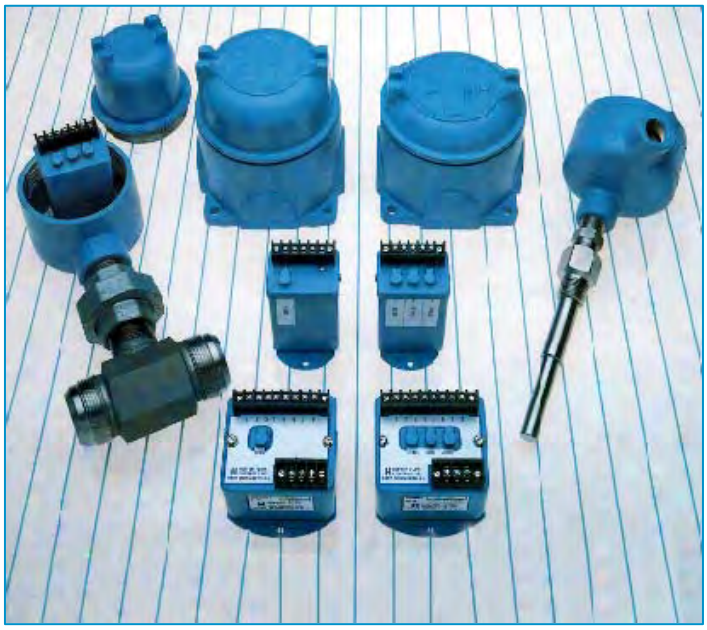

HP-248
September 2004

HOFFER Flow Controls

Perfecting Measurement™

107 Kitty Hawk Lane • P.O. Box 2145 • Elizabeth City, NC 27909
1-800-628-4584 • (252) 331-1997 • Fax (252) 331-2886
www.hofferflow.com email: info@hofferflow.com

Notice

HOFFER FLOW CONTROLS, INC. MAKES NO WARRANTY OF ANY KIND WITH REGARD TO THIS MATERIAL, INCLUDING, BUT NOT LIMITED TO, THE IMPLIED WARRANTIES OF MERCHANTABILITY AND FITNESS FOR A PARTICULAR PURPOSE.

This manual has been provided as an aid in installing, connecting, calibrating, operating, and servicing this unit. Every precaution for accuracy has been taken in the preparation of this manual; however, HOFFER FLOW CONTROLS, INC. neither assumes responsibility for any omissions or errors that may appear nor assumes liability for any damages that may result from the use of the products in accordance with information contained in the manual.

HOFFER FLOW CONTROLS' policy is to provide a user manual for each item supplied. Therefore, all applicable user manuals should be examined before attempting to install or otherwise connect a number of related subsystems.

During installation, care must be taken to select the correct interconnecting wiring drawing. The choice of an incorrect connection drawing may result in damage to the system and/or one of the components.

Please review the complete model number of each item to be connected and locate the appropriate manual(s) and/or drawing(s). Identify all model numbers exactly before making any connections. A number of options and accessories may be added to the main instrument, which are not shown on the basic user wiring. Consult the appropriate option or accessory user manual before connecting it to the system. In many cases, a system wiring drawing is available and may be requested from HOFFER FLOW CONTROLS.

HOFFER FLOW CONTROLS' policy is to make running changes, not model changes, whenever an improvement is possible. This affords our customers the latest in technology and engineering. The information contained in this document is subject to change without notice.

RETURN REQUESTS / INQUIRIES

Direct all warranty and repair requests/inquiries to the Hoffer Flow Controls Customer Service Department, telephone number (252) 331-1997 or 1-800-628-4584. BEFORE RETURNING ANY PRODUCT(S) TO HOFFER FLOW CONTROLS, PURCHASER MUST OBTAIN A RETURNED MATERIAL AUTHORIZATION (RMA) NUMBER FROM HOFFER FLOW CONTROLS' CUSTOMER SERVICE DEPARTMENT (IN ORDER TO AVOID PROCESSING DELAYS). The assigned RMA number should then be marked on the outside of the return package and on any correspondence.

FOR **WARRANTY** RETURNS, please have the following information available BEFORE contacting HOFFER FLOW CONTROLS:

1. P.O. number under which the product was PURCHASED,
2. Model and serial number of the product under warranty, and
3. Repair instructions and/or specific problems relative to the product.

FOR **NON-WARRANTY** REPAIRS OR **CALIBRATIONS**, consult HOFFER FLOW CONTROLS for current repair/calibration charges. Have the following information available BEFORE contacting HOFFER FLOW CONTROLS:

1. P.O. number to cover the COST of the repair/calibration,
2. Model and serial number of the product, and
3. Repair instructions and/or specific problems relative to the product.

LIMITED WARRANTY

HOFFER FLOW CONTROLS, INC. ("HFC") warrants HFC's products ("goods") described in the specifications incorporated in this manual to be free from defects in material and workmanship under normal use and service, but only if such goods have been properly selected for the service intended, properly installed and properly operated and maintained. This warranty shall extend for a period of (1) year from the date of delivery to the original purchaser (or eighteen (18) months if the delivery to the original purchaser occurred outside the continental United States). This warranty is extended only to the original purchaser ("Purchaser"). *Purchaser's sole and exclusive remedy is the repair and/or replacement of nonconforming goods as provided in the following paragraphs.*

In the event Purchaser believes the goods are defective, the goods must be returned to HFC, transportation prepaid by Purchaser, within twelve (12) months after delivery of goods (or eighteen (18) months for goods delivered outside the continental United States) for inspection by HFC. If HFC's inspection determines that the workmanship or materials are defective, the goods will be either repaired or replaced, at HFC's sole determination, free of additional charge, and the goods will be returned, transportation paid by HFC, using the lowest cost transportation available.

Prior to returning the goods to HFC, Purchaser must obtain a Returned Material Authorization (RMA) Number from HFC's Customer Service Department within 30 days after discovery of a purported breach of warranty, but no later than the warranty period; otherwise, such claims shall be deemed waived. See the Return Requests/Inquiries Section of this manual.

If HFC's inspection reveals the goods are free of defects in material and workmanship or such inspection reveals the goods were improperly used, improperly installed, and/or improperly selected for service intended, HFC will notify the purchaser in writing and will deliver the goods back to purchaser upon (i) receipt of Purchaser's written instructions and (ii) the cost of transportation. If Purchaser does not respond within 30 days after notice from HFC, the goods will be disposed of in HFC's discretion.

HFC does not warrant these goods to meet the requirements of any safety code of any state, municipality, or any other jurisdiction, and purchaser assumes all risk and liability whatsoever resulting from the use thereof, whether used singly or in combination with other machines or apparatus.

This warranty shall not apply to any HFC goods or parts thereof, which have bee repaired outside HFC's factory or altered in any way, or have been subject to misuse, negligence, or accident, or have not been operated in accordance with HFC's printed instructions or have been operated under conditions more severe than, or otherwise exceeding, those set forth in the specifications for such goods.

THIS WARRANTY IS EXPRESSLY IN LIEU OF ALL OTHER WARRANTIES, EXPRESSED OR IMPLIED, INCLUDING ANY IMPLIED WARRANTLY OF MERCHANTABILITY OR FITNESS FOR A PARTICULAR PURPOSE. HFC SHALL NOT BE LIABLE FOR ANY LOSS OR DAMAGE RESULTING, DIRECTLY OR INDIRECTLY, FROM THE USE OF LOSS OF USE OF THE GOODS. WITHOUT LIMITING THE GENERALITY OF THE FOREGOING, THIS EXCLUSION FROM LIABILITY EMBRACES THE PURCHASER'S EXPENSES FOR DOWNTIME, DAMAGES FOR WHICH THE PURCHASER MAY BE LIABLE TO OTHER PERSONS, DAMAGES TO PROPERTY, AND INJURY TO OR DEATH OF ANY PERSON. HFC NEITHER ASSUMES NOR AUTHORIZES ANY PERSON TO ASSUME FOR IT ANY OTHER LIABILITY IN CONNECTION WITH THE SALE OR USE OF HFC'S GOODS, AND THERE ARE NO AGREEMENTS OR WARRANTIES COLLATERAL TO OR AFFECTING THE AGREEMENT. *PURCHASER'S SOLE AND EXCLUSIVE REMEDY IS THE REPAIR AND/OR REPLACEMENT OF NONCONFORMING GOODS AS PROVIDED IN THE PRECEDING PARAGRAPHS. HFC SHALL NOT BE LIABLE FOR ANY OTHER DAMAGES WHATSOEVER INCLUDING INDIRECT, INCIDENTAL, OR CONSEQUENTIAL DAMAGES.*

Disclaimer:
Specifications are subject to change without notice.
Some pages are left intentionally blank.

TABLE OF CONTENTS

SECTION I

ACC42 MODULATED CARRIER CONDITIONER/VOLTAGE CONVERTER

The ACC42 Modulated Carrier Conditioner/Converter is an active pickoff accessory for the turbine flowmeter which provides a pulse output and an analog voltage output proportional to flowrate.

The Modulated Carrier principle eliminates the pickoff drag, associated with conventional magnetic pickoffs, resulting in a significant increase in the usable range of a turbine flowmeter at lower rates.

The ACC42 excites a series MCP pickup mounted on the turbine flowmeter. Sensed through the flowmeter body, the motion of the turbine rotor modulates the coil field, subsequent conditioning provides a pulse output signal where each pulse is representative of a discrete volume of fluid and where the frequency is proportional to flowrate.

The analog output is generated by passing the pulse output frequency signal to a frequency to the voltage converter to generate a voltage proportional to flowrate.

Flowmeters compatible with the ACC42 are available in nominal sizes below two inches. Larger flowmeters do not require a modulated carrier pickup.

SPECIFICATIONS

INPUT	Pickup Type - Compatible with Series MCP pickoff. Transmission distance 100 feet (maximum). Cable type Beldon 8422. Modulation frequency range 10 Hz - 3500 Hz.
PULSE OUTPUT	Open collector VMOS transistor 2N6660. Maximum OFF state voltage 60 VDC. Maximum ON current 1.0 amps. TTL/CMOS fanout of 5 TTL loads. AC capacitively coupled square wave, 12 Vp-p.
ANALOG OUTPUT	The analog output is generated by passing the pulse output frequency signal to a frequency to voltage converter to generate a voltage proportional to flowrate. Range 0 to 5 VDC. Controls - Non-interacting zero and span adjustments. Accuracy ±0.1% F. S. 200ppm/°C. F.S. Frequency Range 75 Hz to 2500 Hz (DIP SWITCH SELECTABLE). Impedance less than 50 ohms. Response time 0.5 to 2 seconds for 10 to 90%. Adjustable.

PULSE OUTPUT CHAR.	TTL/CMOS COMPATIBLE OPTION LOGIC 1 2.4V at -.800mA LOGIC 0 0.4V maximum at 100mA OPEN COLLECTOR OPTION TYPE VMOS 2N6660 V Max. (Abs.) 60 VDC I Max. (Abs.) 100 mA AC OPTION 5Vp-p Square Wave
POWER REQUIREMENTS (OPTIONAL)	115 VAC 50/60 Hz 15 - 35 VDC 220/240 VAC 50/60 Hz
TEMPERATURE	0° to 70°C Standard
ENCLOSURE OPTIONS	Standard enclosure Style -2 Case. (See outline drawing) Explosion Proof Enclosure. Explosion Proof Enclosure with 'O' ring seal. NEMA -4 Enclosure.

CONTROLS AND ADJUSTMENTS

FUSE	A circuit protection device located inside of case.
SENS.	A multiple turn control used to set the threshold sensitivity level above the ambient noise pickup.
RANGE	A dual in-line (DIP) switch located on the board which is used to program the module to accept an input frequency range.
SPAN	A multiple turn adjustment which is used to set the voltage output signal to the desired span corresponding to the equivalent flow range (i.e., 0 to 5V corresponding to 0-100 GPM).
ZERO	A multiple turn adjustment which is used to set the output signal with no flow to the desired zero value (i.e., 0.000 VDC).
RESPONSE	An internal multiple turn adjustment which is used to adjust the response time of the analog output.

ORDERING INFORMATION

MODEL **ACC42-(A)-(B)-(C)-(D)-(E)**

PULSE OUTPUT

ANALOG OUTPUT

INPUT POWER

OPTIONAL FEATURE

ENCLOSURE STYLE

PULSE OUTPUT
MODEL ACC42-(A)-( )-( )-( )-( )

OPTION (A)

(1) OPEN COLLECTOR
(2) (2) TTL/CMOS
(3) AC SQUARE WAVE
(5) 0-10 V SQUARE WAVE

ANALOG OUTPUT
MODEL ACC42-( )-(B)-( )-( )-( )

OPTION (B)

(X) NONE
(V) 0-5 VDC
(V10) 0-10 VDC

INPUT POWER
MODEL ACC42-( )-( )-(C)-( )-( )

OPTION (C)

(A) 115 VAC 50/60 HZ
(B) 220 VAC 50/60 HZ
(D) 15-35 VDC

OPTIONAL FEATURE
MODEL ACC42-( )-( )-( )-(D)-( )

OPTION (D)

(PS) DIP SWITCH SELECTABLE
DIVIDE BY 2,4,8,16,32,64,128

ENCLOSURE STYLE
MODEL ACC42-( )-( )-( )-( )-(E)

OPTION (E)

(2) STYLE 2 CASE, GENERAL PURPOSE

(4/O) STYLE 4 CASE, EXPLOSION-PROOF WITH WATER TIGHT 'O' RING
MEETS CLASS I, GROUP C, D (ADALET CASE, XJS WITH FLAT COVER), STOCK #200-0733
CLASS II, GROUPS E, F & G
CLASS III

NOTE: INSERT (X) IN MODEL NUMBER FOR EVERY OPTION NOT SPECIFIED.

DWG NO.	SH	REV
ACC42-403	1	A

REVISIONS

ZONE	REV	DESCRIPTION	DATE	APP
	A	REDRAWN ON CAD. (CS)	930324	

SERVICING PROCEDURES

TO REMOVE COVER/PRINTED CIRCUIT SUBASSEMBLY

1. TURN POWER TO ACC42 OFF.
2. REMOVE TWO MACHINE SCREWS FROM SIDES OF CASE
3. LIFT COVER/PRINTED CARD ASSEMBLY OUT.

REPLACING FUSE

1. REMOVE COVER/PRINTED CIRCUIT SUBASSEMBLY
2. LOCATE FUSE ON SUBASSEMBLY
3. PULL FUSE FROM SOCKET USING FINGERS (PLIERS ARE NOT RECOMMENDED)
4. INSTALL NEW FUSE (50mA FUSE)
5. REASSEMBLE INTO LOWER CASE

RANGE SELECT / PULSE SCALING PROGRAM

1. REMOVE COVER/PRINTED CIRCUIT SUBASSEMBLY
2. TURN 'ON' DESIRED RANGE AND PULSE SCALING POSITION USING A BALL POINT PEN OR SIMILAR OBJECT. SEE RANGE SELECT/ PULSE SCALING DETAIL.
3. REASSEMBLE INTO LOWER CASE

RANGE SELECT/PULSE SCALING DETAIL

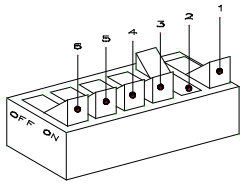

SWITCH 2 IS SHOWN DEPRESSED FOR ILLUSTRATION ONLY
NOTE: SELECT ONE SWITCH ONLY. ALL OTHER SWITCHES MUST BE OFF.

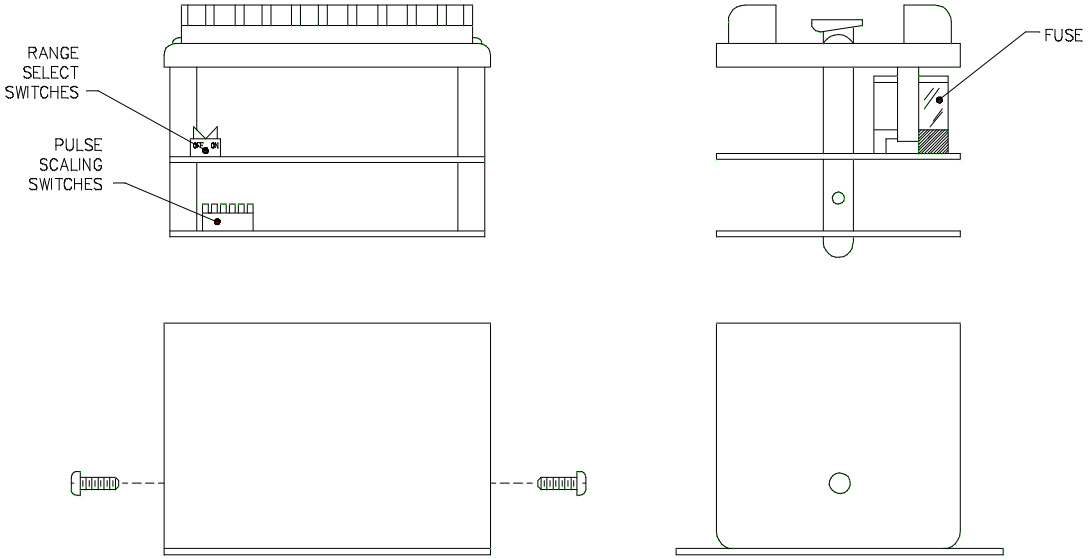

SUBASSEMBLY DETAIL

RANGE SELECT

SELECT SWITCH	F MAX
1	75–150
2	150–300
3	300–600
4	600–1200
5	1200–2400
6	NOT USED

PULSE SCALING

SELECT SWITCH	DIVIDE BY
1	2
2	4
3	8
4	16
5	32
6*	64,128, OR 256*

* DIVIDE BY 64, 128 OR 256 IS FACTORY WIRED CONSULT FACTORY IF CHANGE IS DESIRED.

NEXT ASSY	USED ON
APPLICATION	

MATERIAL

FINISH

CONTRACT/JN		
DRAWN	JD	DATE 2/81
CHECK	JD	2/81
QA		
PROJ ENG	RG	2/81

UNLESS OTHERWISE SPECIFIED DIMENSIONS ARE IN INCHES, TOLERANCES OTHER THAN THE SIZE OF RAW MATERIAL SHALL BE HELD AS FOLLOWS:

2 PLACE DECIMALS	± .01
3 PLACE DECIMALS	± .005
FRACTIONAL	± 1/64
ANGULAR	± 1/2?

HOFFER FLOW CONTROLS, INC.
ELIZABETH CITY, NC

TITLE
CONTROLS AND ADJUSTMENTS

SIZE	FSCM NO	DWG NO	REV
C	33321	ACC42-403	A

SCALE N/A SHEET 1 OF 1

SECTION II

FLOWMETER INSTALLATION

GENERAL

Proper application of the turbine flowmeter requires a suitable piping installation in order to achieve accurate and reliable operation.

The piping configuration immediately preceding and following the flowmeter is termed the meter run. Refer to the manufacturer's outline and installation instructions when installing the flowmeter and meter run.

RELATIVE - The performance of the turbine flowmeter is affected by the fluid swirl and non-uniform velocity profiles. The following recommendation will reduce such flow irregularities.

It is advisable not to locate the meter run immediately downstream of pumps, partially opened valves, bends or other similar piping configurations. In addition, the area surrounding the flowmeter should be free of sources of electrical noise such as motors, solenoids, transformers and power lines which may be coupled to the pickoff device.

METER RUN - In general, the meter run should be chosen to have the same inner diameter as the meter bore. A minimum of 10 pipe diameters of straight pipe upstream and 5 pipe diameters downstream are required. Where this optimum line configuration can not be implemented, it is advisable to install a flow straightener properly positioned upstream of the flowmeter. Orientation is not a critical factor, however, horizontal is a preferred orientation.

BYPASS - A properly sized bypass run with suitable blocking valves may be equipped where an interruption in fluid flow for turbine meters servicing can not be tolerated.

STRAINER - A strainer, filter and/or air eliminator is recommended to reduce the potential of fouling or damage. See table for recommended mesh size.

On initial startup of a line, it is advisable to install a spool piece purging the line to eliminate damaging the flowmeter, due to flux, tape, solder, welds or other contaminates carried along by the fluid stream.

CAVITATION - Cavitation causes measurement inaccuracies in turbine flowmeter and should be avoided by suitable line and operating configurations.

Whenever the pressure within a pipeline instantaneously falls below the equilibrium vapor pressure of the fluid, a portion of the fluid vaporizes and forms bubbles in the pipeline. This is termed cavitation. Cavitation is eliminated by maintaining adequate back pressure on the flowmeter. A downstream valve that provides the necessary back pressure is one means for preventing cavitation in the metering run. Control valves should be located downstream, if possible. Some installations may also make use of a vapor eliminator upstream of the flowmeter.

The minimum required back pressure may be estimated using Equation A:

Equation A - Back Pressure Equation

$$Min: Back\ Pressure = 1.25 \times Vapor\ Pressure + 2 \times Pressure\ Drop$$

INSTALLATION WIRING LAYOUT FOR INTERCONNECTIONS USING MCP PICKUP

In considering the interconnection between the flowmeter and the flow measurement system some attention must be given to anticipated noise sources and to the coupling of these noise sources to the interconnecting wiring.

Noise signals may be coupled inductively or capacitvely into the wiring between the flowmeter and the electronic measuring systems. In general, utilizing a shielded, twisted pair for the interconnection greatly reduces this coupling. The shield should be grounded on one end of the cable only. In general, grounding only on the electronic measuring system is best.

However, even with proper interconnecting cabling crosstalk with other signal lines or power lines may still occur and should be avoided. Physical isolation in the manner in which the wiring is run reduces the chances of potential problems.

The turbine flowmeter equipped with a Modulated Carrier Pickup (MCP) should not be located more than 100 feet from the Modulated Carrier Conditioner. It is recommended that the Modulated Carrier Conditioner be installed on or near the flowmeter to assure proper operation. Enclosures suitable for mounting in hazardous and wet areas are available.

INSTALLATION OF ACC42 (DC POWERED)

The Model ACC42 should be placed in a convenient location which maintains access to the unit should repairs or readjustment be required.

Refer to outline and installation drawing for the appropriate terminals for interconnections. Connections to the terminal block should be carefully dressed to avoid having bare wires extend pass the screw clamp on the terminal block. This is particularly important for units mounted within the explosion proof enclosure to assure wiring will not become fouled when the cover is installed.

Connect two conductor shielded cables from flowmeter. Connect shield to ACC42 only.

The DC power connection should be made through a circuit breaker so that power can be turned off while servicing accessory model. The input power type is factory wired **15-35 VDC** based on the model number specified. An earth ground connection is also required.

Connect pulse output is used, several output pulse waveforms are available factory equipped. Wire to appropriate terminal for waveform desired and specified.

If the analog output has been equipped connect wiring to appropriate terminals and load. A shielded, twisted pair wire is recommended. Ground shield on one end only. Use some precautions as described for flowmeter input signal.

NOTES:

1. FACTORY RECOMMENDS 10" PIPE DIA. UPSTREAM AND 5 PIPE DIA. DOWNSTREAM OF SAME SIZE PIPE AS FLOWMETER. A FLOW STRAIGHTENER IS RECOMMENDED IF THIS IS NOT POSSIBLE OR FOR CUSTODY TRANSFER APPLICATIONS.

REVISIONS

REV	DESCRIPTION	DATE	APP
A	REDRAWN	1-31-92	
B	ADDED NOTE 2, CHG'D MESH SIZE	3-17-92	
C	DRAWING NO. WAS INSTL-104.	950907	

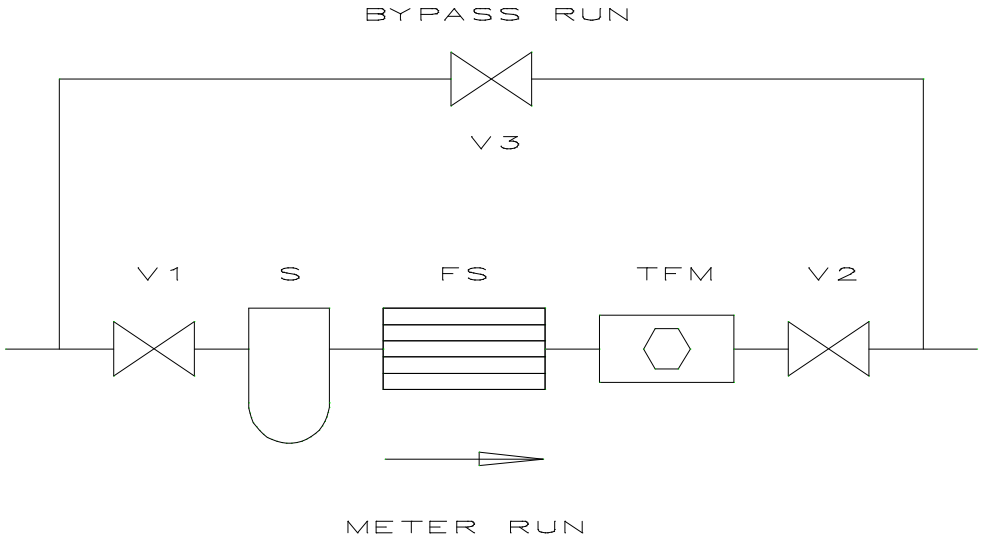

METER SIZE	MESH SIZE
MF SERIES	100
1/4" - 1/2"	100
5/8" - 1 1/4"	70
1 1/2" - 3"	40
4" - 12"	24

V1, V2	BLOCKING VALVE
S	STRAINER
FS	FLOW STRAIGHTENER
TFM	TURBINE FLOWMETER
V3	BYPASS VALVE

REPLACES INSTL-104

NEXT ASSY	USED ON
APPLICATION	

MATERIAL

FINISH

CONFIDENTIAL PROPERTY OF HOFFER FLOW CONTROLS, INC. (HFC) NOT TO BE DISCLOSED TO OTHERS, REPRODUCED, OR USED FOR ANY OTHER PURPOSE, EXCEPT AS AUTHORIZED IN WRITING BY HFC. MUST BE RETURNED ON DEMAND, ON COMPLETION OF ORDER OR OTHER PURPOSE FOR WHICH LENT.

		DATE
DRAWN	DW	1-31-92
CHECK	JD	1-31-92
QA	H.COVELL	1-31-92
PROJ ENG	KRH	1-31-92

UNLESS OTHERWISE SPECIFIED DIMENSIONS ARE IN INCHES TOLERANCES OTHER THAN RAW MATERIAL SHALL BE HELD AS FOLLOWS:

2 PLACE DECIMAL	±.01
3 PLACE DECIMAL	±.005
FRACTIONAL	±1/64
ANGULAR	±1/2°

HOFFER FLOW CONTROLS, INC.
ELIZABETH CITY, NC 27909

TITLE

TYPICAL TURBINE INSTALLATION

SIZE	CAGE CODE	DWG NO	REV
A	33321	500-0194	C

SCALE NONE

SHEET 1 OF 1

H:\dRAWINGS\500\50001941.DWG

NOTES:

1. SPAN AND ZERO ARE ONLY EQUIPPED FOR ANALOG OUTPUT OPTION.
2. UNIT MAY BE MOUNTED IN NEMA 4 OR EXPLOSION PROOF ENCLOSURE.

REVISIONS			
REV	DESCRIPTION	DATE	APP
A	REDRAWN ON CAD. (CS)	930331	

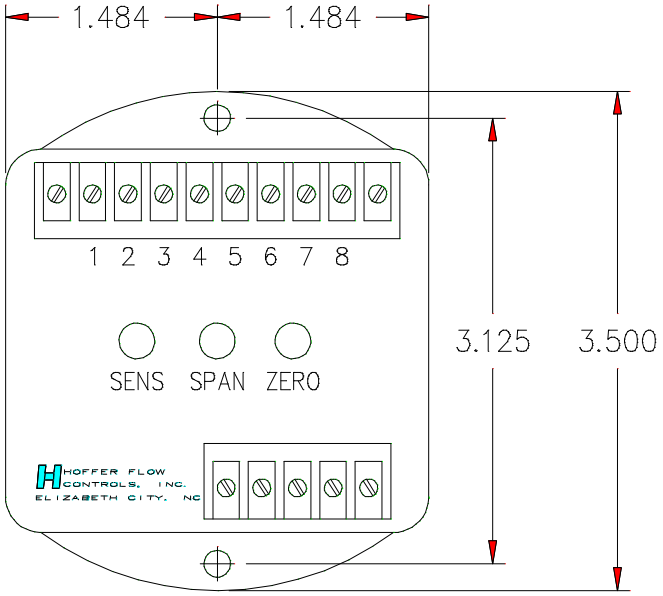

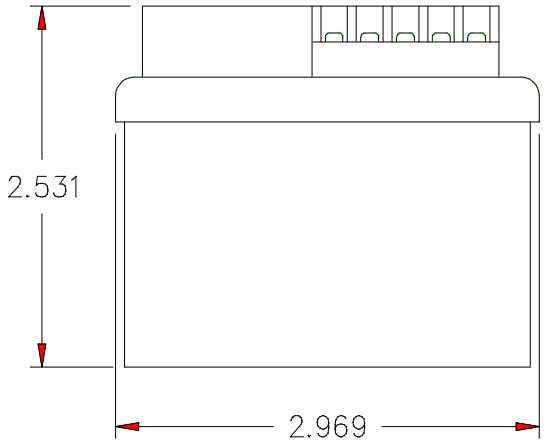

		MATERIAL	CONTRACT/JN	
			DRAWN JD	DATE 9/82
			CHECK JD	11/82
		FINISH	QA	
			PROJ ENG RG	11/82
NEXT ASSY	USED ON			
APPLICATION				

UNLESS OTHERWISE SPECIFIED DIMENSIONS ARE IN INCHES TOLERANCES OTHER THAN RAW MATERIAL SHALL BE HELD AS FOLLOWS:

2 PLACE DECIMAL	±.01
3 PLACE DECIMAL	±.005
FRACTIONAL	±1/64
ANGULAR	±1/2°

HOFFER FLOW CONTROLS, INC.
ELIZABETH CITY, NC 27909

TITLE

OUTLINE DRAWING, ACC42

SIZE	CAGE CODE	DWG NO	REV
A	33321	ACC42-401	A

SCALE NONE

SHEET 1 OF 1

NOTES:

ENCLOSURE MEETS:
CLASSI, GROUPS C & D
CLASS II, GROUPS E, F & G
NEMA 7 & 9

REVISIONS			
REV	DESCRIPTION	DATE	APP

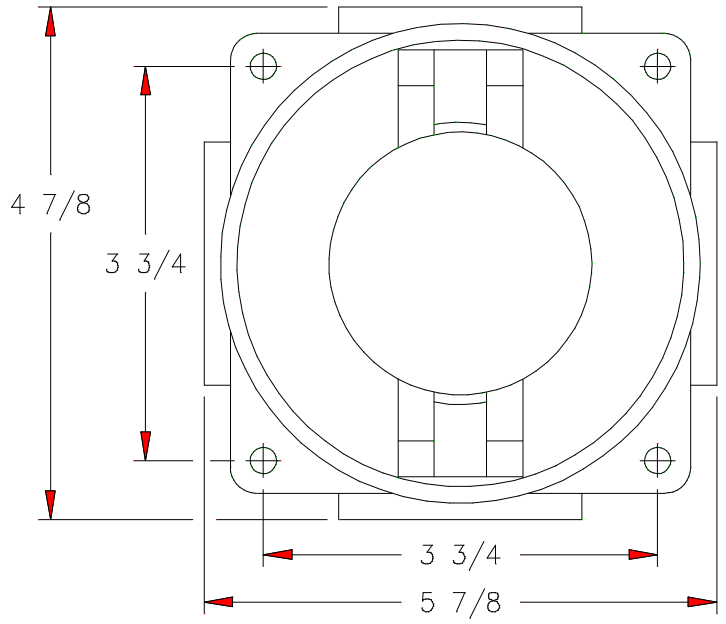

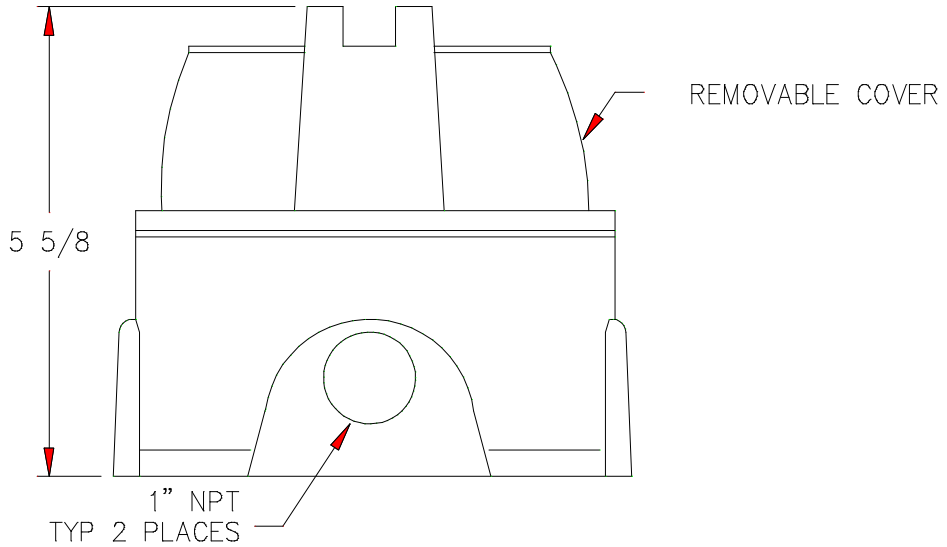

		MATERIAL	DRAWN	DATE
			CHECK	
			PROJ ENG	
		FINISH		
NEXT ASSY	USED ON			
APPLICATION				

UNLESS OTHERWISE SPECIFIED DIMENSIONS ARE IN INCHES TOLERANCES OTHER THAN RAW MATERIAL SHALL BE HELD AS FOLLOWS:

2 PLACE DECIMAL	±.01
3 PLACE DECIMAL	±.005
FRACTIONAL	±1/64
ANGULAR	±1/2?

HOFFER FLOW CONTROLS, INC.
ELIZABETH CITY, NC 27909

TITLE

ENCLOSURE, EXPLOSION PROOF– STYLE 4H

SIZE	FSCM NO	DWG NO	REV
A	33321	500–0020	—

SCALE NONE | SHEET 1 OF 1

NOTES:

1. WIRE TO 7 OR 8 DEPENDING ON TYPE OF OUTPUT WAVEFORM DESIRED AND SPECIFIED.

REVISIONS

REV	DESCRIPTION	DATE	APP
A	REDRAWN ON CAD (CS)	930323	JD
B	MCP PICKUP WAS MAG. (CS)	940831	

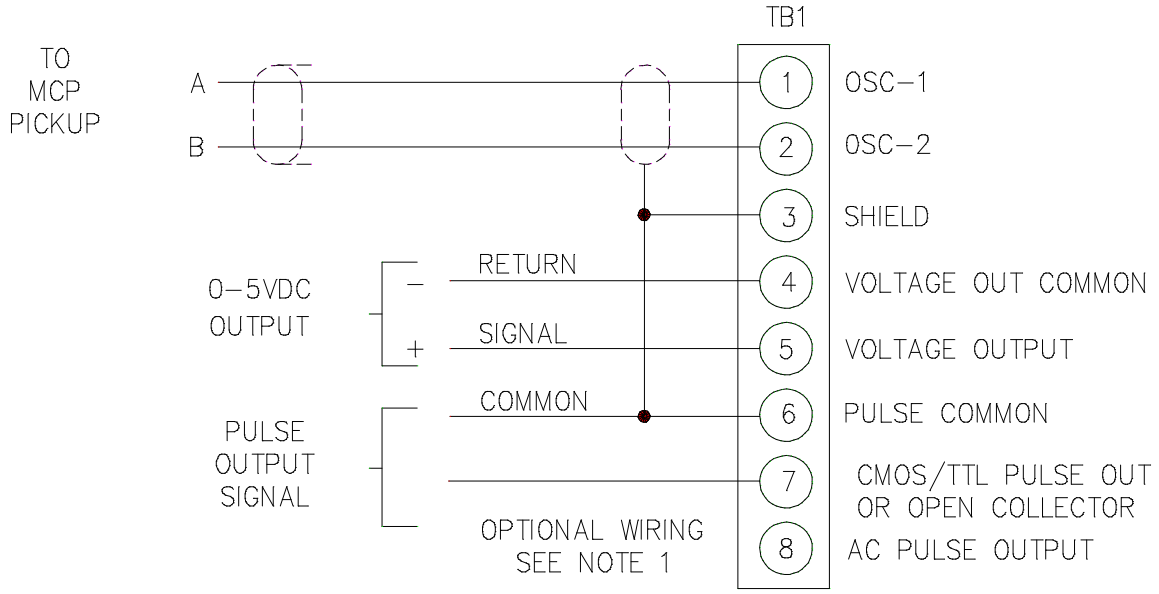

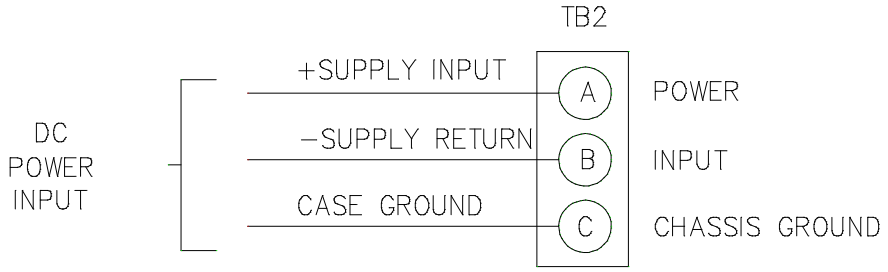

MATERIAL	CONTRACT/JN		
	DRAWN RG	DATE 3/82	
	CHECK JD	3/82	
FINISH	QA		
	PROJ ENG RG	3/82	

CONFIDENTIAL PROPERTY OF HOFFER FLOW CONTROLS, INC. (HFC) NOT TO BE DISCLOSED TO OTHERS, REPRODUCED, OR USED FOR ANY OTHER PURPOSE, EXCEPT AS AUTHORIZED IN WRITING BY HFC. MUST BE RETURNED ON DEMAND, ON COMPLETION OF ORDER OR OTHER PURPOSE FOR WHICH LENT.

UNLESS OTHERWISE SPECIFIED DIMENSIONS ARE IN INCHES TOLERANCES OTHER THAN RAW MATERIAL SHALL BE HELD AS FOLLOWS:

2 PLACE DECIMAL ±.01
3 PLACE DECIMAL ±.005
FRACTIONAL ±1/64
ANGULAR ±1/2°

NEXT ASSY | USED ON

APPLICATION

HOFFER FLOW CONTROLS, INC.
ELIZABETH CITY, NC 27909

TITLE
INSTALLATION WIRING-ACC42

SIZE	CAGE CODE	DWG NO	REV
A	33321	ACC42-702	B

SCALE NONE | SHEET 1 OF 1

REVISIONS			
REV	DESCRIPTION	DATE	APP

NOTES:

1. ENCLOSURE MEETS:
   CLASS I, GROUP C & D
   CLASS II, GROUP E, F & G
   NEMA 7 & 9
2. USED WHEN SIGNAL CONDITIONER IS ENCLOSED, MOUNTED OR REMOTE.

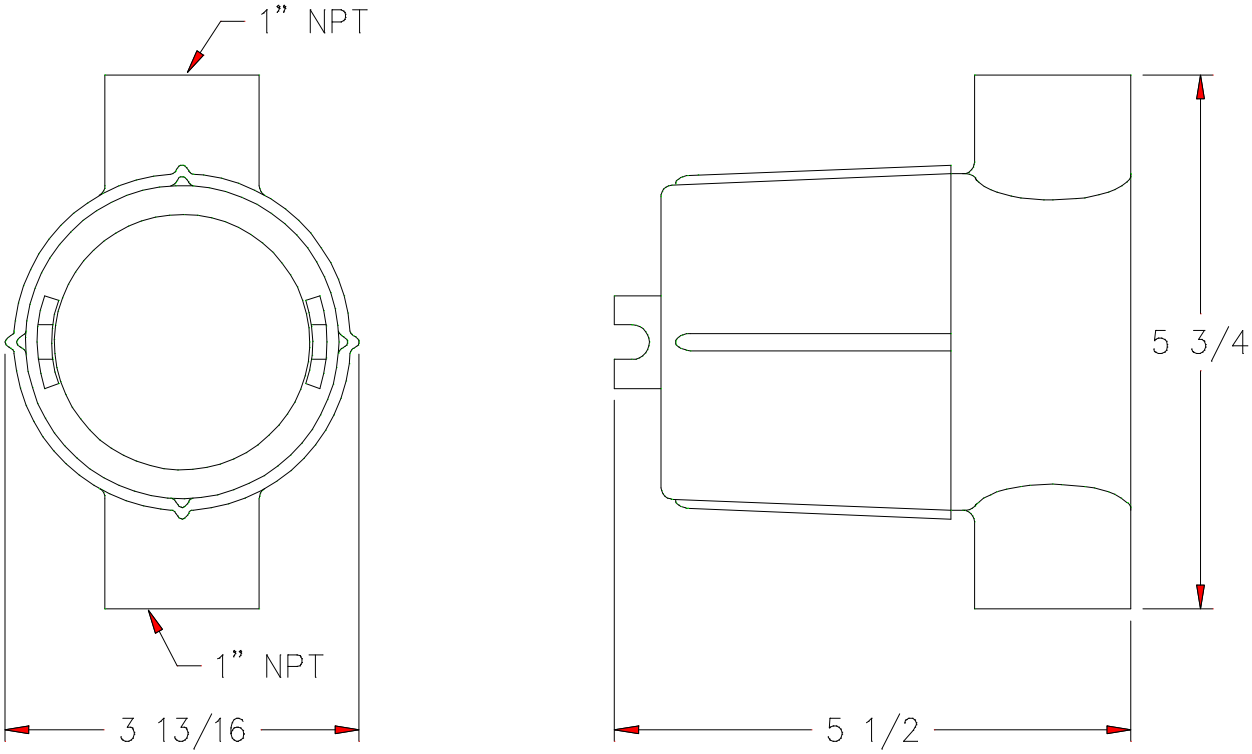

		MATERIAL	DRAWN	DATE
			CHECK	
			PROJ ENG	
		FINISH		
NEXT ASSY	USED ON			
APPLICATION				

UNLESS OTHERWISE SPECIFIED DIMENSIONS ARE IN INCHES TOLERANCES OTHER THAN RAW MATERIAL SHALL BE HELD AS FOLLOWS:

2 PLACE DECIMAL	±.01
3 PLACE DECIMAL	±.005
FRACTIONAL	±1/64
ANGULAR	±1/2°

HOFFER FLOW CONTROLS, INC.
ELIZABETH CITY, NC 27909

TITLE
ENCLOSURE, EXPLOSION PROOF– STYLE 3

SIZE	CAGE CODE	DWG NO	REV
A	33321	500–0018	—

SCALE NONE | SHEET 1 OF 1

NOTES:
ENCLOSURE MEETS:
CLASS I, GROUPS C & D
CLASS II, GROUPS E, F & G
NEMA 7 & 9

REVISIONS			
REV	DESCRIPTION	DATE	APP

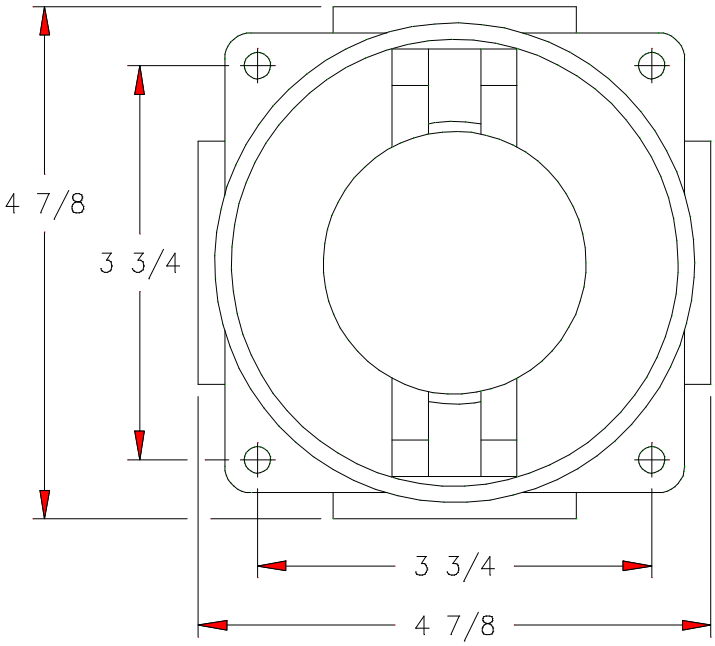

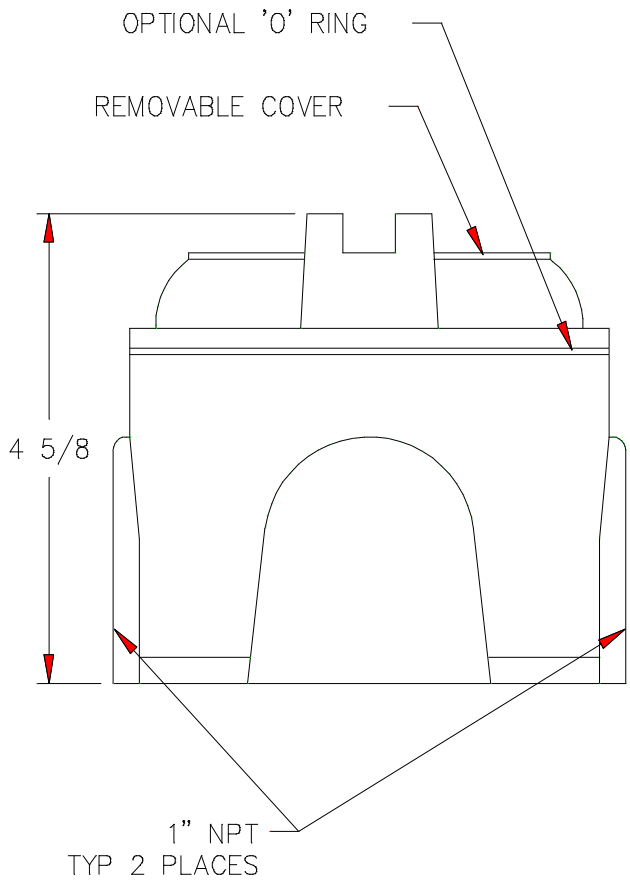

		MATERIAL	DRAWN	DATE	HOFFER FLOW CONTROLS, INC. ELIZABETH CITY, NC 27909
			CHECK		
			PROJ ENG		
		FINISH			TITLE ENCLOSURE, EXPLOSION PROOF– STYLE 4
NEXT ASSY	USED ON	CONFIDENTIAL PROPERTY OF HOFFER FLOW CONTROLS, INC. (HFC) NOT TO BE DISCLOSED TO OTHERS, REPRODUCED, OR USED FOR ANY OTHER PURPOSE, EXCEPT AS AUTHORIZED IN WRITING BY HFC. MUST BE RETURNED ON DEMAND, ON COMPLETION OF ORDER OR OTHER PURPOSE FOR WHICH LENT.	UNLESS OTHERWISE SPECIFIED DIMENSIONS ARE IN INCHES TOLERANCES OTHER THAN RAW MATERIAL SHALL BE HELD AS FOLLOWS: 2 PLACE DECIMAL ±.01 3 PLACE DECIMAL ±.005 FRACTIONAL ±1/64 ANGULAR ±1/2?		SIZE A / FSCM NO 33321 / DWG NO 500–0021 / REV –
APPLICATION					SCALE NONE / SHEET 1 OF 1

SECTION III

CALIBRATION OF ANALOG OUTPUT - GENERAL CONSIDERATIONS (LIQUID APPLICATIONS)

INTRODUCTION

In general, all flow measurement systems supplied by Hoffer Flow Controls have been factory calibrated as specified by the user, at the time of purchase, free of charge.

All systems which underwent such a factory calibration have a calibration card attached prior to shipment. This card contains the details of analog outputs, as well as other useful calibration data.

Field calibration is only required when a change has occurred or is sought to the measuring system. Such a change may be due to repair, replacement or recalibration of the flowmeter, or perhaps a change in the analog output span.

PROCEDURE

Begin by determining the equivalent maximum volumetric flowrate in ACFM, expected by the application, term this ACFM (MAX). ACFM (MAX) may be calculated based on the analog output scale requirements or may be the maximum flowrate listed on the flowmeter's calibration sheet.

From the calibration constant (or K Factor) listed on the data sheet for the flowmeter, obtain the frequency corresponding to ACFM (MAX) using Equation 1 and designate this frequency F (MAX).

Equation 1 - Frequency Equation

$$\frac{F(MAX) = K(AVE) \times ACFM(MAX)}{60}$$

FOR ANALOG OPTION

The analog output of the ACC42 may be calibrated with the aid of an external oscillator used in conjunction with a frequency counter.

The external oscillator is used to supply a test frequency. In this method, the external oscillator is connected to the signal input terminals as shown in Figure 1. The oscillator's output frequency is set to equal F (MAX) as indicated on the frequency counter.

1. The course range adjustment is accomplished by selecting a switch position on a DIP switch located on the PCA-57 printed circuit card. See Table A to determine required switch position and set into switch as shown on the *Controls and Adjustments drawing* for anticipated F (MAX).

NOTE: ***It is necessary to open the cover of the enclosure by removing two screws on the side of the box and lifting cover. Two printed circuit cards are attached. The "RANGE" Dip Switch may be programmed with a pen. Input power should be removed during this step.***

2. Connect a digital voltmeter or equivalent, across the voltage output terminals.

3. Adjust ZERO control for desired zero voltage (i.e., .001 VDC, .000 VDC).

4. Turn SPAN POT fully CCW until detent is felt or 25 turns.

5. Inject the Test Frequency equal to F (MAX) while adjusting SPAN for voltage equal to +5.000 V ±1 mV. See test setup shown in Figure 1.

NOTE: ***Iterate steps 3 and 4 until no change is observed.***

FOR PULSE SCALING OPTION

1. An optional DIP switch is located on the PCA-57 printed circuit card. See drawing ACC-42-403 to determine required switch position and set into switch, as shown in the Controls and Adjustments drawing, for required divide by N.

2. For a required divide by 64, 128 or 256, switch position 6 must be jumpered as shown in the Controls and Adjustments drawing.

Table A - Analog Switch Position

F (MAX)	RANGE SELECT SWITCH POSITION
75 TO 150	1
150 TO 300	2
300 TO 600	3
600 TO 1200	4
1200 TO 2400	5

Table B - Pulse Scaling Switch Position

) N	SWITCH POSITION
2	1
4	2
8	3
16	4
32	5
64*	6
128*	
25*	

****NOTE:*** ***For divide by 64, 128 or 256, switch position 6 is jumpered to appropriate location on PCA-60 printed circuit board.***

NOTES:
1. USE TEST AMPLITUDE OF 30mV RMS SINUSOIDAL WAVE FORM.
2. REMOVE ALL OTHER INTERCONNECTIONS OTHER THAN THOSE SHOWN.
3. OBSERVE CAUTION WHEN PERFORMING CALIBRATION.
4. INPUT POWER MAY BE EITHER 15–35VDC, 115VAC OR 220/240VAC.

REVISIONS

REV	DESCRIPTION		DATE	APP
A	REDRAWN ON CAD.	(CS)	930331	JD
B	REVISED PER CPA 530	(CS)	970131	HK
C	REVISED PER ECP333	(CS)	970716	

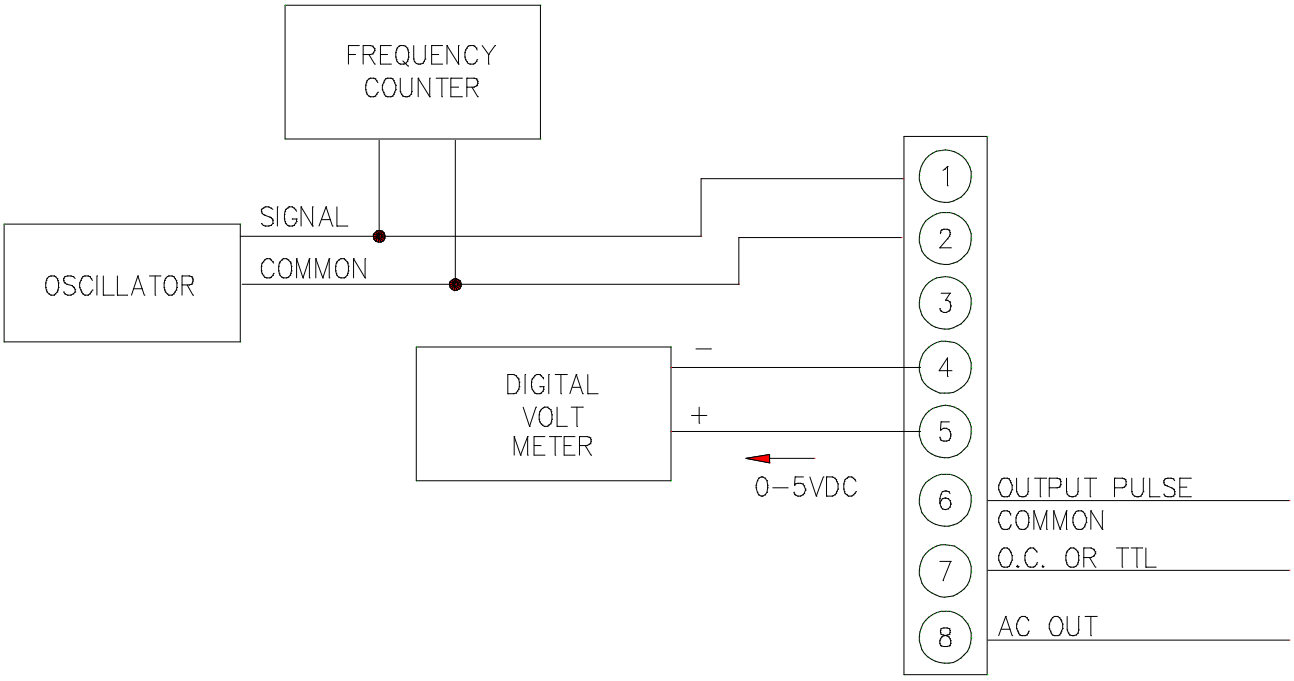

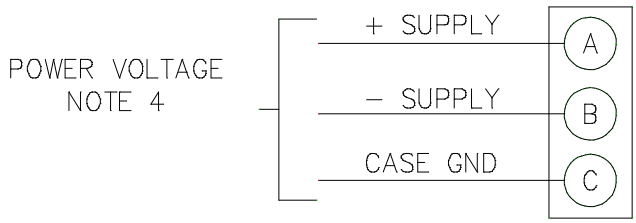

		MATERIAL	CONTRACT/JN	
			DRAWN RG	DATE 2-18-83
			CHECK JD	2-18-83
		FINISH	QA	
			PROJ ENG RG	2-18-83
NEXT ASSY	USED ON			
APPLICATION				

UNLESS OTHERWISE SPECIFIED DIMENSIONS ARE IN INCHES TOLERANCES OTHER THAN RAW MATERIAL SHALL BE HELD AS FOLLOWS:

2 PLACE DECIMAL ±.01
3 PLACE DECIMAL ±.005
FRACTIONAL ±1/64
ANGULAR ±1/2°

HOFFER FLOW CONTROLS, INC.
ELIZABETH CITY, NC 27909

TITLE
CALIBRATION SETUP–MAG

SIZE	CAGE CODE	DWG NO	REV
A	33321	ACC42–603	C

SCALE NONE | SHEET 1 OF 1

THIS PAGE LEFT INTENTIONALLY BLANK.

SECTION IV

OPERATION

INITIAL STARTUP

Perform any purging of piping with spool piece in place. Once completed, install the flowmeter and connect cabling to pickup coil. If false counting action occurs turn sensitivity control counterclockwise.

INTRODUCTION

The pulse output and analog output commence with flow through the flowmeter.

For the analog output, the span is that established by either the factory calibration or field calibration. The range is 0-5 V into a minimum of 1000 ohms of load resistance.

PRINCIPLE OF OPERATION

A simplified block diagram of the ACC42 Modulated Carrier Conditioner/Converter is given on the *Block Diagram - ACC42 drawing*. Key functional blocks, as well as, information flow are designated. The basic operation of the system is as follows.

The MCP on the turbine flowmeter is connected to the Model ACC42 with a shielded twisted pair signal cable. The MCP pickup coil forms part of an oscillator circuit and is excited by the ACC42. Motion of the turbine rotor modulates the oscillator output. A demodulator converts the AM signal to a signal at a frequency determined by the rotor speed. The low level demodulated signal is then passed through a signal conditioning chain where it is filtered, amplified and shaped into a train of digital pulses whose frequency is related to the volume flowrate and where each pulse represents a discrete volume of fluid.

ANALOG OUTPUT

The signal entering the frequency to analog converter is passed through a combination of a divide by N and a DIP switch MATRIX. The QN output is chosen whose pulse rate is between 75 and 150 Hz at the maximum flowrate to be measured. This scaled pulse rate is fed to a precision monostable circuit. The output of the monostable is then filtered into an analog voltage that is proportional to volumetric flowrate.

The output amplifier is a voltage to voltage amplifier. If offers zero and span available in a standard process range of 0 to 5 VDC.

POWER SUPPLY

The power supply provides for operating bias voltage for all internal circuitry.

PULSE OUTPUT

The pulse output amplifier may be configured to provide one the following:

1. High level AC square wave (Capacitively coupled).
2. Open collector transistor.
3. TTL/CMOS compatible square pulse of 5 volt amplitude.

The output amplifier is buffered from the signal driving the analog output.

An optional divide by N may be equipped if pulsing scaling is required.

REVISIONS			
REV	DESCRIPTION	DATE	APP
A	NOTES (RG)	8/89	JD
B	REDRAWN ON CAD. (CS)	930331	

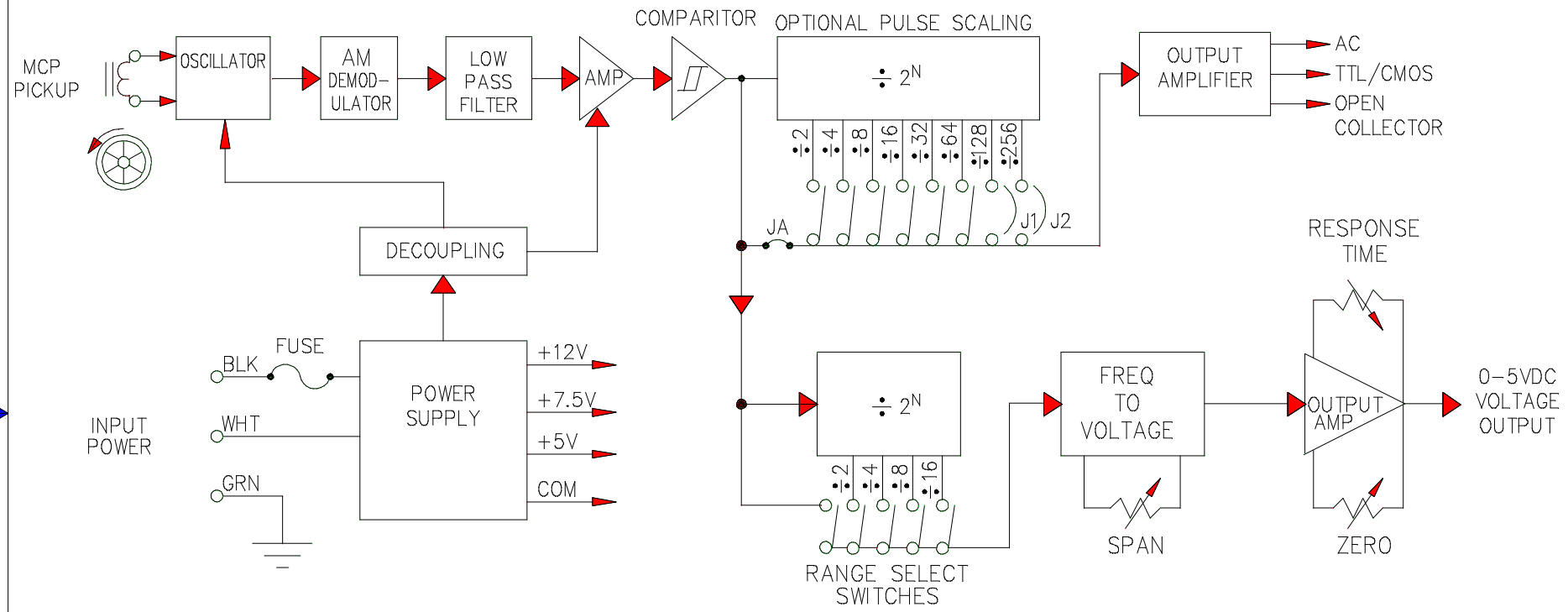

		MATERIAL	CONTRACT/JN	
			DRAWN J.D.	DATE 2/19/81
			CHECK J.DEFEO	2/19/81
		FINISH	QA	
			PROJ ENG RG	2/19/81
NEXT ASSY	USED ON			
APPLICATION				

CONFIDENTIAL PROPERTY OF HOFFER FLOW CONTROLS, INC. (HFC) NOT TO BE DISCLOSED TO OTHERS, REPRODUCED, OR USED FOR ANY OTHER PURPOSE, EXCEPT AS AUTHORIZED IN WRITING BY HFC. MUST BE RETURNED ON DEMAND, ON COMPLETION OF ORDER OR OTHER PURPOSE FOR WHICH LENT.

UNLESS OTHERWISE SPECIFIED DIMENSIONS ARE IN INCHES, TOLERANCES OTHER THAN THE SIZE OF RAW MATERIAL SHALL BE HELD AS FOLLOWS:

2 PLACE DECIMAL	±.01
3 PLACE DECIMAL	±.005
FRACTIONAL	±1/64
ANGULAR	±1/2?

HOFFER FLOW CONTROLS, INC.
ELIZABETH CITY, NC 27909

TITLE

BLOCK DIAGRAM-ACC42

SIZE	FSCM NO	DWG NO	REV
A	33321	ACC42-601	B

SCALE NONE

SHEET 1 OF 1

SECTION V

MAINTENANCE, GENERAL

Hoffer Flow Controls Flow Measurement Systems are constructed to give a long service life in the targeted measuring field and service environment. However, problems do occur form time to time and the following points should be considered for preventive maintenance and repairs.

The bearing type used in the flowmeter was chosen to give compromise between long life, chemical resistance, ease of maintenance and performance. A preventive maintenance schedule should be established to determine the amount of wear which has occurred since last overhaul. See user's manual for flowmeter for further instructions.

A spare parts list has been provided which at the discretion of the user, may be user stocked. Consult with the manufacturer if an abridged spare parts list is sought. The recommended spare parts list may be found following this section and in the user's manual for the flowmeter.

In case the flow measurement system malfunctions or becomes inoperative, a troubleshooting procedure is enclosed.

Factory consultation is available to assist in diagnosing problems. In addition, factory repair parts and service are available for individuals who wish to utilize this service.

A complete set of schematic diagrams for all printed cards is available from Hoffer Flow Controls for users who wish their own personnel to service the measuring systems.

NOTE:

- ***All printed circuit cards are warranted for one year after date of sale.***
- ***All printed circuit cards may be factory repaired at a nominal fee for parts and labor after warrantee period.***

TROUBLESHOOTING AND MAINTENANCE

INTRODUCTION

In case of an inoperable or malfunctioning system the following procedures can be used to isolate the faulty wiring, printed circuit boards and/or alternate causes. The majority of repairs can be made in the field thereby reducing the time a unit is out of service.

A recommended spare parts list is given immediately following the troubleshooting portion of this manual. The necessary documentation is contained with this manual with the exception of the calibration data sheet for the turbine flowmeter. This calibration is supplied separately.

Factory consultation is available to assist in diagnosing problems. Note that in some cases factory repairs can be performed more easily than can be accomplished in the field.

GENERAL INSPECTION TO DETERMINE IF UNIT IS OPERATING PROPERLY

Proper operation of the ACC42 can be assumed when with power applied to the unit:

1. The pulse output produces a pulse train of the desired amplitude when flow through the flow transducer occurs.
2. The analog output produces a voltage output signal of 0-5V with a span corresponding to that established by the calibration procedure.

OBSERVED CONDITION	PROBLEM/CORRECTIVE ACTION
A. NO PULSE OUTPUT	1. Inspect terminal strip wiring for conformity to the installation instructions and for acceptance workmanship. 2. Verify proper polarity of DC power voltage. 3. Determine if flowmeter rotor is fouled. 4. Defective pickup coil. Replace MCP. 5. Defective cable. Replace. 6. Defective ACC42. Repair or replace.
B. PULSING OUTPUT WITH NO FLOW	1. Low power voltage. 2. Defective pickup coil. Replace. 3. Defective cable. Replace. 4. Defective ACC42. Repair or replace.
C. ANALOG OUTPUT MALFUNCTION	1. Improper wiring termination. Correct wiring. 2. ACC42 improperly calibrated. Recalibrate. 3. Defective circuitry with the ACC42. Factory repair ACC42.

NOTE: Refer to flowmeter user's manual for repair instructions for the turbine flowmeter.

Table C - Recommended Spare Parts List

MODEL ACC42 MODULATED CARRIER CONDITIONER/CONVERTER		
PART NUMBER	**DESCRIPTION**	**QUANTITY**
ACC42-XX	Modulated Carrier Conditioner/Converter	1
MCP	Modulated Carrier Pickup	1

NOTE: Additional spare parts may be recommended for the turbine flowmeter. See user's manual for turbine flowmeter for details.

REVISIONS			
REV	DESCRIPTION	DATE	APP
A	SHIELD TIED TO COMMON. (JD)	12/82	JD
B	REDRAWN ON CAD. (CS)	930331	JD
C	DWG NO. WAS ACC42-302 (CS)	950815	

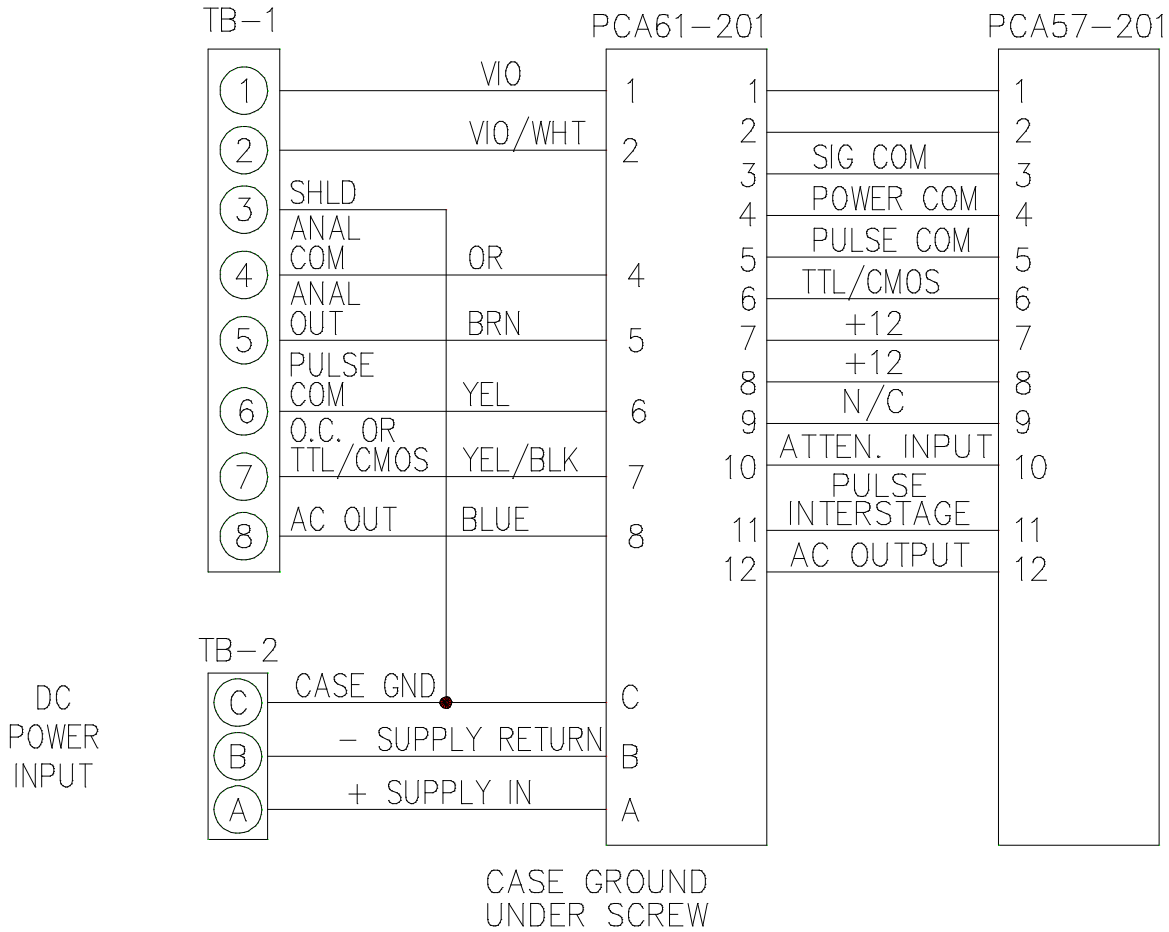

REPLACES ACC42-302

MATERIAL	CONTRACT/JN		HOFFER FLOW CONTROLS, INC. ELIZABETH CITY, NC 27909
	DRAWN J.D.	DATE 11/82	
	CHECK J.D.	11/82	TITLE WIRING, INTERNAL CASE-ACC42
FINISH	QA		
	PROJ ENG		

NEXT ASSY	USED ON
APPLICATION	

CONFIDENTIAL PROPERTY OF HOFFER FLOW CONTROLS, INC. (HFC) NOT TO BE DISCLOSED TO OTHERS, REPRODUCED, OR USED FOR ANY OTHER PURPOSE, EXCEPT AS AUTHORIZED IN WRITING BY HFC. MUST BE RETURNED ON DEMAND, ON COMPLETION OF ORDER OR OTHER PURPOSE FOR WHICH LENT.

UNLESS OTHERWISE SPECIFIED DIMENSIONS ARE IN INCHES TOLERANCES OTHER THAN RAW MATERIAL SHALL BE HELD AS FOLLOWS:

2 PLACE DECIMAL ±.01
3 PLACE DECIMAL ±.005
FRACTIONAL ±1/64
ANGULAR ±1/2?

SIZE	FSCM NO	DWG NO	REV
A	33321	700-0002	C

SCALE NONE | SHEET 1 OF 1