FOR OFFICIAL USE ONLY

NAVSEA PUBLICATION NUMBER TBD

TECHNICAL MANUAL

SY-100 NAVAL FUEL FLOWMETER SYSTEM

Including:

Flow Sensor, Model HO-1-1/2-SY-100
Electronic Enclosure, Model 47-SY-100

DESCRIPTION, OPERATION, INSTALLATION
AND MAINTENANCE INSTRUCTIONS

HOFFER FLOW CONTROLS, INC.
Elizabeth City, N.C. 27909

N00024-89-C-4093

Published by direction of Commander, Naval Sea Systems Command.

16 January 1991

FOR OFFICIAL USE ONLY

HP-214
March 1998

HOFFER FLOW CONTROLS, INC.
Perfecting Measurement™
107 Kitty Hawk Lane • P.O. Box 2145 • Elizabeth City, North Carolina 27906-2145
1-800-628-4584 • (252) 331-1997 • FAX (252) 331-2886
www.hofferflow.com • Email: info@hofferflow.com

FORWARD

The manual contains information required to install, operate, maintain and troubleshoot the SY-100 Naval Fuel Flowmeter System.

The SY-100 Naval Fuel Flowmeter System is intended to provide ships personnel with the ability to monitor fuel oil consumption at selected points on the vessel.

The SY-100 Naval Fuel Flowmeter System is intended to assist in the improvement of the operating efficiency of the ship by the increased energy awareness and conservation of ships personnel.

The SY-100 Fuel Flow Sensor is of a Fail-Safe construction where a failure of the flow sensor will not result in a blockage of fuel flow, neither will a portion of the Flow Sensor come adrift.

The SY-100 Naval Fuel Flowmeter System is considered to be a non-critical system but has been screened to withstand environmental stresses associated with shipboard service.

The manual is organized to permit ease of use. Individual sections are provided to cover General Information, Operation, Functional Description, Preventative Maintenance, Trouble Shooting, Corrective Maintenance and Installation. A parts list section is also provided. Illustrations are used to improve the clarity of the information presented.

Ships, training activities, supply points, depots, naval shipyards and supervisors of shipbuilding are requested to arrange for the maximum practical use and evaluation of NAVSEA technical manuals. All errors, omissions, discrepancies and suggestions for improvement to NAVSEA technical manuals shall be reported to the Commanding Officer, Naval Ship Weapon Systems Engineering Station (Code 5H00), Port Hueneme, CA 93043-5007 or NAVSEA Technical Manual Deficiency/Evaluation Report, NAVSEA Form 9086/10. To facilitate such reporting, three copies of NAVSEA Form 9086/10 are included at the end of this technical manual. All feedback shall be thoroughly investigated and originators will be advised of action resulting therefrom. Extra copies of NAVSEA Form 9086/10 may be requisitioned from the Naval Publications and Forms Center (NPFC), Philadelphia, PA 19120-5099.

THIS PAGE INTENTIONALLY LEFT BLANK

TABLE OF CONTENTS

Chapter / Section Page

LIST OF ILLUSTRATIONS iii
LIST OF TABLES iii
SAFETY SUMMARY v

1. GENERAL INFORMATION
1-1 Safety Synopsis 1-1
1-2 Introduction 1-1
1-3 Equipment Description 1-1
1-4 Reference Data 1-2
1-5 Equipment, Accessories and Publication Supplied 1-3

2. OPERATION
2-1 Introduction 2-1
2-2 Controls and Indicators 2-1
2-3 Normal Operation 2-2
2-4 Initial Adjustments 2-3
2-5 Startup Procedures 2-3
2-6 Infrequent Modes of Operation 2-4
2-7 Abnormal and Casualty Modes 2-4
2-8 Shutdown Procedures 2-5
2-9 Emergency Shutdown Procedures 2-5

3. FUNCTIONAL DESCRIPTION
3-1 Introduction 3-1
3-2 Principle of Operation 3-1
3-3 Flow Sensor Principle of Operation 3-1
3-4 Electronics unit Principle of Operation 3-2

4. PREVENTATIVE MAINTENANCE
4-1 Introduction 4-1
4-2 Flow Sensor Cleaning 4-1
4-3 Flow Sensor Inspection 4-2
4-4 Lubrication 4-3
4-5 Flow Sensor Assembly 4-3

5. TROUBLE SHOOTING
5-1 Introduction 5-1
5-2 Trouble Shooting Procedures Flow Sensor 5-1
5-3 Trouble Shooting Procedures Electronics unit 5-2
5-3-1 Unit Provides Flow Indication with no Flow Present 5-2
5-3-2 No Flow Indication with Flow Present 5-3
5-3-3 No Analog Output 5-3
5-3-4 Display not lit with Power Applied 5-3
5-3-5 Totalizer Counter will not Advance with Flow 5-4

TABLE OF CONTENTS (Cont'd)

Chapter/Section Page

6. CORRECTIVE MAINTENANCE
6-1 Introduction 6-1
6-2 Alignment of Electronics unit 6-1
6-3 Special Analog Range Setup 6-3
6-4 Flow Sensor Reinstallation Procedure 6-4
6-5 Electronics Encl. Reinstal. Proc 6-5
6-6 Flow Sensor Removal 6-5

7. PARTS LIST
7-1 Introduction 7-1
7-2 List of Major Components 7-1
7-3 Parts List 7-1
7-4 List of Attaching Hardware 7-1
7-5 List of Manufacturers 7-1
7-6 Parts Location Illustration 7-1

8. INSTALLATION
8-1 Introduction 8-1
8-2 Installation Drawings 8-1
8-3 Site Selection Information 8-1
8-3-1 Flow Sensor Site Selection 8-2
8-3-2 Electronics unit Site Selection 8-2
8-3-3 Auxiliary Output 8-3
8-4 Unpacking and Repacking 8-4
8-5 Flow Sensor Installation 8-5
8-6 Electronics unit Installation 8-6
8-6-1 Installation of the Interconnecting and Power Cable 8-6
8-6-2 Installation of the Auxiliary Output 8-8
8-7 Installation Checkout 8-9
8-7-1 Visual Examination 8-9
8-7-2 Electronics Unit Sensitivity Adjustment 8-9
8-7-3 Electronic Unit Simulated Operational Checkout 8-10
8-7-4 System Operation Verification 8-11

LIST OF ILLUSTRATIONS

Number	Title	Page
1-1	SY-100 Flow Sensor	1-7
1-2	SY-100 Electronics Unit	1-8
2-1	Controls and Indicators	2-6
3-1	Fuel System SY-100	3-5
3-2	Flow Sensor Principle of Operation	3-6
3-3	Block Diagram 47-SY-100	3-7
4-1	Flow Sensor Disassembly	4-4
4-2	Inspection of Internals Kit	4-5
5-1	Flow Sensor Fault Logic Diagram	5-5
5-2	Electronics unit Controls	5-6
5-3	47-SY-100 Electronics Unit	5-7
6-1	Electronics unit controls	6-7
6-2	Flow Sensor Disassembly	6-8
7-1	HO-l-l/2-SY-100 Flow Sensor	7-6
7-2	47-SY-100 Electronics Unit	7-7
8-1	HO-l-l/2-SY-100 Outline Dimension	8-13
8-2	47-SY-100 Outline Dimension	8-14
8-3	HO-l-l/2-SY-100 Installation	8-15
8-4	Interconnecting Electrical Wiring	8-16
8-5	Electronics Unit controls	8-17

LIST OF TABLES

Number	Title	Page
1-1	System Reference Data	1-3
1-2	Specification Summary HO-l-l/2-SY-100	1-4
1-3	Model 47 Specification Summary	1-5
1-4	Equipment, Accessories and Publications Supplied	1-6
7-1	List of Major Components	7-2
7-2	HO-l-l/2-SY-100 Components Parts List	7-2
7-3	47-SY-100 Components Parts List	7-3
7-4	List of Attaching Hardware	7-4
7-5	List of Manufacturers	7-5
8-1	List of Recommended Cable	8-12

THIS PAGE INTENTIONALLY LEFT BLANK

SAFETY SUMMARY

The SY-100 Naval Fuel Flowmeter System is designed to satisfy the safety requirements for shipboard use.

The safety precautions and warnings described here are to be observed at all times. Additional precautionary messages appear throughout this Technical Manual.

There is a danger associated with fuel oil spillage which may accompany the removal of the flow sensor from the fuel line for maintenance and/or cleaning operations. Drain fuel lines prior to removing the flow sensor from the line.

There is a danger associated with fuel oil leakage which may accompany the improper installation of the gaskets and/or improper tightening of the flange mounting bolts. Verify the quality and alignment of the flange gaskets prior to installation. Securely tighten the flange bolts during installation and/or after maintenance operations.

The Fuel Flow Sensor should be installed downstream of a flow strainer. Large particles passing through the flow sensor may result in a change in calibration or damage to the flow sensor.

It is recommended that only ships company, trained in electrical safe practices, be instructed to perform maintenance and/or troubleshooting operations on the 47-SY-100 Electronics Unit.

It is recommended that only nonmetallic adjustment tools be used to adjust the internal controls and adjustments to minimize the likelihood of accidental short circuits or shock hazards.

There is a danger of electrical shock when replacing the over-current protection fuse on the PCA-131 printed circuit assembly if the unit is powered during this operation. It is recommended that the power connector be unplugged or disconnected prior to replacing the fuse.

It is required that an input power ground be provided to satisfy the requirements for safe grounding practice and to assure Electromagnetic Compatibility.

It is required that the Auxiliary Output's Cable Shield be grounded at both ends of the cable to assure EMI compatibility with the shipboard environment whenever the Auxiliary Output is used.

All cabling shall be externally strain relieved to assure mechanical shock or shipboard vibration will not cause excessive stress on the internal cable conductors.

The 115 V AC 60 Hz power cable shall be externally current limited suitable over-current protection device such as a circuit breaker or fuse is required to protect against faults which might occur.

It is recommended that the shipboard power source be as free from electrical interference and noise sources as possible.

CHAPTER 1

GENERAL INFORMATION

1-1 SAFETY SYNOPSIS

The SY-100 Naval Fuel Flowmeter System is designed to provide a fail safe fuel consumption monitoring system for use in Navy vessels.

Fuel spills associated with improper installation or maintenance actions shall be avoided. Observe all safe practice when servicing the Flow Sensor.

The SY-100 Naval Fuel Flowmeter System is powered by 115 V AC 60 Hz power. An electrical shock hazard may result from improper installation or service procedures. It is recommended that only qualified individuals familiar with electrical safe practices and shock prevention service the internal portion of the 47-SY-100 Electronics Unit.

1-2 INTRODUCTION

The SY-100 Naval Fuel Flowmeter System is a general purpose fuel oil flowmetering system for use on shipboard installations. The unit provides a number of display indications of fuel usage and has an auxiliary output for optional connection to a remote data acquisition system.

This technical manual provides descriptive data, operation, maintenance, installation information and repair parts lists and instructions for the SY-100 Naval Fuel Flowmeter System.

1-3 EQUIPMENT DESCRIPTION

The SY-100 Naval Fuel Flowmeter System consists of the HO-1-1/2-SY-100 flow sensor and the 47-SY100 Electronics Unit. Together these two components provide a rugged fuel flow measurement system.

The principal components of the SY-100 Naval Fuel Flowmeter System are illustrated in Figure 1-1 and Figure 1-2.

The intended use of this system is to provide accurate fuel measurements associated with the operations of shipboard power and propulsion plant boilers.

This fuel information is provided to the operator by means of visual displays of total fuel consumption and rate of fuel consumption indicators.

The fuel consumption rate information is also made available to a remote data acquisition system by means of a 4 to 20 rnA DC Auxiliary Output signal.

This fuel usage information may be used in monitoring energy consumption or fuel conservation efforts and in monitoring of individual boiler usage and boiler efficiency studies during any period of operation of this ship.

The SY-100 Naval Fuel Flowmeter System is capable of accurately measuring the flowrate and total flow of MIL-F-16884G Marine Diesel Fuel and similar low viscosity fuels.

The SY-100 Naval Fuel Flowmeter System offers flow measurement capabilities from 450 to 3600 gallons per hour (GPH) within a basic accuracy of +/-2% or better. The flow measurement range of the system is determined by the measurement range capabilities of the flow sensor.

The system provides useful information from 180 to 7200 GPH.

The flow sensor has a fail safe construction and minimal pressure drop in the event of fouling. This adds to the ease of installation for shipboard service. A meter fuel bypass line is not required.

1-4 REFERENCE DATA

Table 1-1 lists the pertinent reference data for the SY-100 Naval Fuel Flowmeter System.

Table 1-2 lists the pertinent reference data for the HO-I-I/2SY-100 Flow Sensor.

Table 1-3 lists the pertinent reference data for the 47-SY-100 Electronics Unit.

1-5 EQUIPMENT, ACCESSORIES AND PUBLICATIONS SUPPLIED

Table 1-4 lists the equipment, accessories and documents supplied including dimensions, weights and volumes.

Table 1-1

System Reference Data

System Model No.	SY-100
System Nomenclature	Naval Fuel Flowmeter System
CID	
RIC	
Manufacturer	Hoffer Flow Controls, Inc.
Address	107 Kitty Hawk Lane Elizabeth City, NC 27909
CAGE Code	33321
Fuel Oil Type	MIL-E-16884G
Environmental	40 to 140 Degrees F 80 percent relative humidity Shock Rating MIL-STD-901C Type B, Class 1, Group A (Flow Sensor), Grade B (Electronics Unit) Vibration MIL-STD-167-1 Type I EMI to MIL-STD-461/462 Part 5
Rated Flow Range	450 to 3600 Gallons per Hour
Extended Flow Range	180 to 7200 Gallons per Hour
System Accuracy	+/-2% of Reading (450-3600 GPH)
Max. Operating Pressure	750 PSIG
Applicable Equipment Specification	N00024-89-R-4093(Q) Attachment A

Table 1-2

Specification Summary

HO-l-l/2-SY-100 Flow Sensor

Flow Sensor Model No.	HO-l-l/2-SY-100
Fuel System Interface	300 #, 1-1/2", ANSI Raised Face Flange
Installation Length	6" +/-1/16" (face to face)
Construction	Monolithic, Fail Safe Construction
Service Fuel Oil Type	MIL-E-16884G
Max. Operating Pressure (Test pressure)	750 PSIG
Rated Flow Range	450 to 3600 Gallons per Hour
Extended Usable Range	180 to 7200 Gallons per Hour
Rated Accuracy	+/-2 % of Reading (450-3600 GPH)
Repeatability	+/-0.5% of Reading (450 to 3600 GPH)
Stalled Rotor Pressure Drop	Less than 25 PSID
Pickup Type	Hermetically Sealed, Magnetic Motion Sensor, PIN PC-24-45G
Output Signal Characteristics	Minimum signal 10 MVrms, sinusoidal waveform, DC impedance 1400 ohms +/-20%
Mating Connector	MS-3l06F-lOSL-4S
Environmental	Shock Rating MIL-STD-90lC Type B, Class 1, Group A (Flow Sensor),Vibration MIL-STD-167-l Type I
Spanner Wrench	P/N HO-l-l/2-112-SY-100

Table 1-3

Model 47 Specification Summary

Electronics Model No.	47-SY-100
Flow Indicators Provided	Resettable Gallons Flow Totalizer Non-Resettable Gallons Flow Totalizer Gallons Per Hour Flow Rate Indicator
Display Types	Totalizers -Electromechanical Counter Rate - Four digit LED Displays (0.5")
Display Resolution	One Gallon
Auxiliary Output Option	4 to 20 rmA DC Signal proportional to 0 to 3600 GPH with a resolution of 2 Gallons per Hour (See also special range capabilities). Ref para 2-6 and 6-3
Accuracy	+/-2.0% of reading (450-3600 GPH)
Maximum Load Resistance	500 Ohms
Special Auxiliary Output Capabilities	Special range option 0 to 4500 GPH
Electrical Power Required	115 V AC 60 Hz Single Phase
Fusing	Internally Fused with Spare Fuse 1/4 amp 250 V slo blo ceramic body
Enclosure Ratings	Splashproof MIL-E-2036, MIL-STD-I08E
Mating Electrical	Signal Input: MS3106F-10SL-3S Auxiliary Output: MS3106F-14S-7P Power Input: MS3106F-16-10S
Operating Modes	Switch selectable OPER: operating mode of instrument TEST: calibrate mode for the instrument
Electronics Input	Sensitivity 10 mV, 10 to 2 kHz filter, sinusoidal waveshape from flow sensor's magnetic pickup, adjustable sensitivity

Table 1-4

Equipment, Accessories and publications Supplied

Items supplied with each system

Flow Sensor Model No.	HO-l-l/2xl-l/2-3-120-T-1M-F3SS-SY-100
Electronics Model No.	47-SY-100
Mating Flow Pickup Electrical Connector	MS-3106F-10SL-4S
Mating Signal Input Electrical Connectors	MS3106F-10SL-3S
Mating Auxiliary Output Electrical Connector	MS3106F-14S-7P
Mating Power Input Electrical	MS3106F-16-10S
Commercial Manual	

Items Supplied with Replace Internals Kit

Internal Kit	KITl-1/2-3-12O-T-INTERNALS-SY-100
Equipment Label w/ K-Factor	HO-1-1/2-113-SY-100 Part 1
Spanner Wrench	P/N HO-1-1/2-112-SY-100

SPECIFICATIONS FOR FLOW SENSOR

1) GENERAL :
   FLUID MEDIA: F-70 FUEL (MIL-F-16884G AT 20°C)
   FLOW RATE RANGE — MINIMUM 450 GPH
   MAXIMUM 3600 GPH
   OVERRANGE 7200 GPH (CONTINUOUS)
   LINEARITY (450-3600 GPH) +/- 2.0% OF READING.
   REPEATABILITY +/- 0.5% OF READING.
   PRESSURE DROP (LOCKED ROTOR) LESS THAN 25 PSID AT 3600 GPH.
   OPERATING TEMPERATURE: 40° TO 140° F, 80% RH.
   PROOF PRESSURE: 750 PSIG.

2) MILITARY SPECIFICATIONS :
   VIBRATION — MIL-STD-167-1 TYPE I AND TYPE II
   SHOCK — MIL-S-901-C TYPE B, CLASS 1, GRADE A
   RELIABILITY — BRO LIFE OF 3 YEARS
   FLANGES — MIL-STD-777
   WELDING (NOTE 7) — MIL-STD-278 AND P/O OF MIL-STD-22
   INSPECTION — MIL-I-45208
   IDENTIFICATION PLATE — MIL-P-15024 TYPE C (ENGRAVED)

3) MATERIALS OF CONSTRUCTION :
   BEARING — TUNGSTEN CARBIDE SLEEVE JOURNAL WITH BUSHING AND 2 WASHERS
   ROTOR — 17.4 PH S.S.
   FLOW STRAIGHTNER — 316 S.S.
   HOUSING — 316 S.S.
   FLANGES — 316 S.S.

4) MOUNTING REQUIREMENTS :
   UPSTREAM STRAIGHT PIPE RUN 15" OF 1 1/2" PIPE (MINIMUM)
   DOWNSTREAM STRAIGHT PIPE RUN 7 1/2" OF 1 1/2" PIPE (MINIMUM)
   ORIENTATION LIMITATION — NONE
   NO FLOW STRAIGHTNERS REQUIRED

5) TEST REQUIREMENTS — INSPECTION TO MIL-I-45208
   FLOW RATE TEST POINTS 450 , 900 , 1800 , 2700 & 3600 GPH
   SPECIAL TEST RATE 180 & 7200 GPH
   100% FACTORY TESTING
   HYDROSTATIC TESTING 750 PSI
   FIRST ARTICLE APPROVAL REPORT NUMBER — T.B.A.

6) MAINTAINABILITY :
   MTTR 2 HOURS OR LESS
   95% OF CORRECTIVE MAINTENANCE, 3 1/2 HOURS OR LESS

7) SYSTEM ACCURACY REQUIREMENTS :
   FLOW RATE — ± 2.0% OF RATE ± 5 GPH
   SIMULATED FLOW RATE — ± 2.0% OVER 10 MINUTE TEST SIMULATION WITH CONSTANT FREQUENCY

8) MATING CONNECTOR — MS3106F-10SL-4S PER MIL-C-5015 SUPPLIED WITH EACH METER.

9) FLOWMETER BODY AND FLANGES ARE MACHINED FROM CASTING OR BAR STOCK. NO WELDING REQUIRED, 316 S.S. OR EQUAL.

10) ROTOR ASSEMBLY INTERNALS CONSIST OF THE FOLLOWING :
   ROTOR , CONES , SHAFT , HANGERS & SLEEVE
   COMPLETET WITH CALIBRATION & "K" TAG & SPANNER WRENCH
   P/N KIT: 1/2-3-120-T-INTERNALS-SY100

11) PICK-UP COIL (MAGNETIC) P/N PC24-45C

12) ROTOR TIP TO HOUSEING CLEARENCE SHALL BE .035" TO ALLOW PASSAGE OF PARTICLES OF .033"SIZE OR SMALLER.

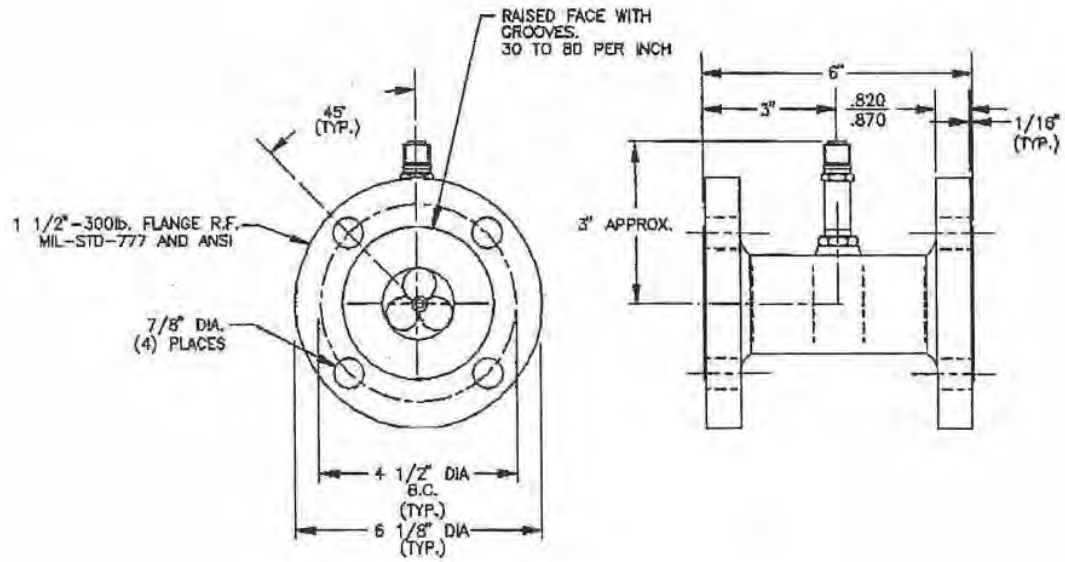

FIGURE 1-1 SY100 FLOW SENSOR

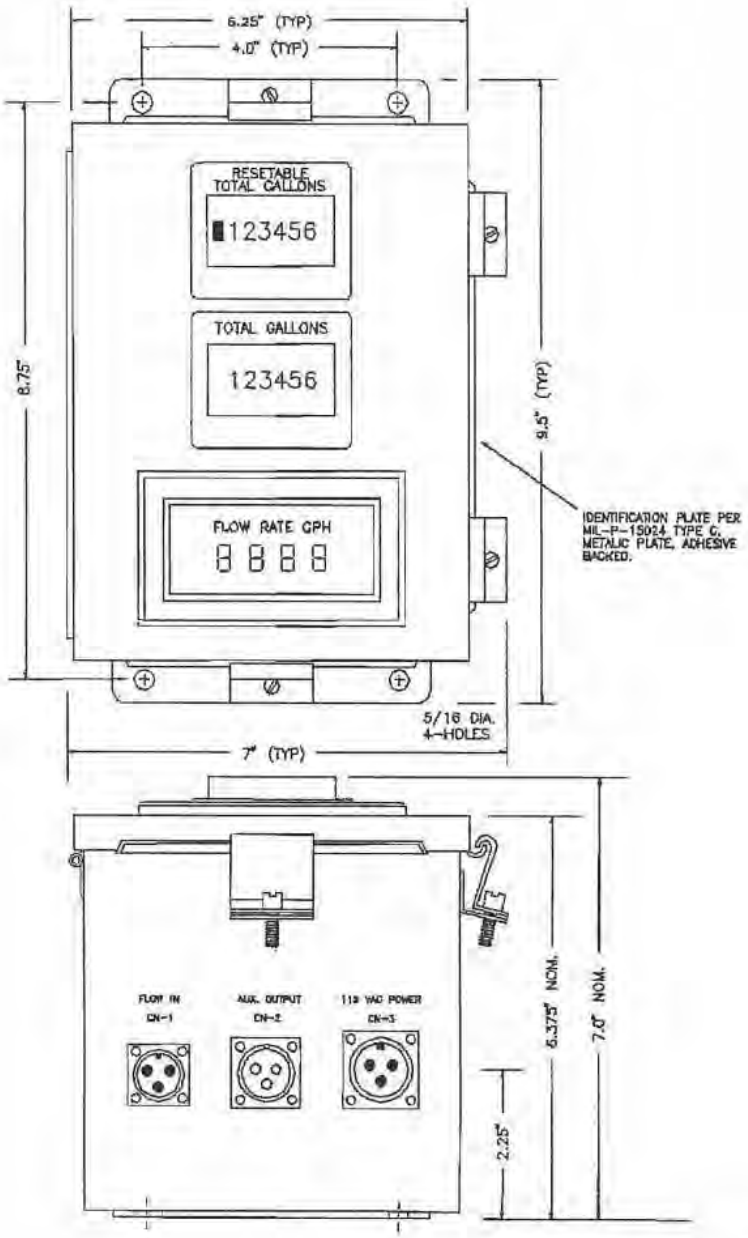

SPECIFICATIONS

1. GENERAL DESCRIPTION FOR FUEL FLOWMETER ELECTRONIC READOUT PACKAGE.
   ENCLOSURE SIZE - 8"X6"X6" PER MIL-E-2036 AND MIL-STD-108C
   ENCLOSURE RATING - NEMA-4 WITH WATER TIGHT WINDOW (SPLASH PROOF).
   MOUNTING - SUITABLE FOR SURFACE OR BRACKET MOUNTING (STEEL CASE).
   INTERNALLY FUSED WITH SPARE FUSE.
   MAINTANABILITY - MTTR LESS THAN 2 HOURS,
   CORRECTIVE MAINTENANCE (85%) LESS THAN 3.5 HRS.

2. FLOW RATE INDICATOR
   DISPLAY TYPE - 4 DIGIT LED
   DISPLAY HEIGHT - 0.43"
   LENS - RED LUCITE WITH SILK SCREENED DESCRIPTORS.
   DISPLAY UNITS - GPH WITH 1.0 GPH RESOLUTION.
   ACCURACY - +/- 2.0% +/- 5 GPH (OR BETTER).

3. FLOW TOTALIZER (RESETABLE)
   DISPLAY TYPE - 6 DIGIT ELECTRO-MECHANICAL COUNTER.
   DISPLAY HEIGHT - 0.157"
   LENS - TRANSPARENT, SOFT, PVC.
   DISPLAY UNITS - GALLONS.
   ACCURACY - +/- 2% +/- 1 DIGIT (OR BETTER).

4. FLOW ACCUMULATOR (NON-RESETABLE)
   DISPLAY TYPE - 6 DIGIT ELECTRO-MECHANICAL COUNTER.
   DISPLAY HEIGHT - 0.157"
   LENS - TRANSPARENT, SOFT, PVC.
   DISPLAY UNITS - GALLONS.
   ACCURACY - +/- 2% +/- 1 DIGIT (OR BETTER).

5. AUXILIARY OUTPUT FOR REMOTE DISPLAY.
   TYPE - 4-20 mA CURRENT PROPORTIONAL TO FLOW RATE 0 - 3600 GPH.
   MAXIMUM LOAD RESISTANCE - 300 OHMS.
   ACCURACY - +/- 2% +/- 5 GPH AT 70 DEGREES F. OR BETTER.

6. SCALING FACTOR.
   SEALED BCD CODED SWITCHES.
   ADJUSTMENT RANGE 0.1000 TO 0.9999
   RESOLUTION 0.0001 INCREMENTS.
   AUXILIARY SCALING X0.01 (TOTALIZATION ONLY).

7. SENSITIVITY ADJUSTMENT.
   ADJUSTMENT PROVIDES PROVISION TO ASSURE NOISE WILL NOT CAUSE FALSE REGISTRATION AT NO FLOW.

8. INPUT POWER
   VOLTAGE 115 VAC +/- 10%
   FREQUENCY 60 HZ NOMINAL.
   TYPE - 1
   INTERFACE - SECTION 300 OF DOD-STD-1399.

9. ELECTRICAL CONNECTOR DESCRIPTIONS (MIL-C-5015 TYPE F MATE / TYPE E CASE).
   CN-3 POWER INPUT CONNECTOR MS3102E-16-10P MATES TO MS3106E/F-16-10S
   CN-2 AUX. OUTPUT CONNECTOR MS3102E-14S-7S MATES TO MS3106E/F-14S-7P
   CN-1 FLOW INPUT CONNECTOR MS3102E-10SL-3P MATES TO MS3106E/F-10SL-3S

10. SPECIAL PROVISIONS MTBF 100,000 HRS.
    INTERNAL TEST POINTS (CLEARLY LABELED).
    INTERNAL ADJUSTMENTS (CLEARLY LABELED).
    INTERNAL CALIBRATION OSCILLATOR.
    SHOCK HAZARD SHIELDING THRU PLASTIC COVERS.

11. MILITARY SPECIFICATIONS CONFORMITY REQUIREMENTS:
    INSPECTION TO MIL-I-45208A
    FACTORY TESTING 100% W/ 18 HRS BURN IN, USING SIMULATED FLOW INPUTS
    SHOCK RESISTANCE - MIL-S-901H TYPE C, CLASS 1, GRADE B
    VIBRATION RESISTANCE - MIL-STD-167-1 TYPE-I AND II
    EMI RESISTANCE - MIL-STD-461 PART 6
    INTERFACE - DOD-STD-1399
    FABRICATION - MIL-STD-275, MIL-STD-22
    SPECIFICATION FOR FUEL FLOWMETER REV. K.

12. ENVIRONMENTAL
    TEMPERATURE 40 TO 140 DEGREES F.
    R.H. TO 80%

FIGURE 1-2 47-SY100 ELECTRONICS UNIT

CHAPTER 2

OPERATION

2-1 INTRODUCTION

This section provides the user with the procedures necessary to effectively use the equipment to perform its designed task. Descriptions of the various operational phases as well as features in normal operation are presented.

2-2 CONTROLS AND INDICATORS

The SY-IOO Naval Fuel Flowmeter system is equipped with a resettable gallons, non-resettable gallons and a gallons per hour display. The RESETTABLE GALLONS display is equipped with a reset button to the left of the display beneath the flexible, elastomer, splash cover. Pushing the splash cover over the reset button will clear the display to 000000. These features are illustrated in Figure 2-1.

The RESETTABLE GALLONS display provides the user with indication of the total gallons of fuel consumed since the unit was last cleared or reset. This display may be used by the operator to record the fuel usage during a watch, a day or a passage, depending on procedures and guidelines established for the vessel.

The NON-RESETTABLE GALLONS display provides the user with accumulative indication of the total gallons of fuel consumed. Since this display cannot be reset, it may be used to record fuel consumption readings at any time. The fuel consumed may be computed by subtracting the current reading from the last reading. Note that both GALLONS displays will automatically "rollover" to 000000 after the number 999999 has been reached.

The GALLONS PER HOUR display will indicate the current fuel consumption rate. The display updates with new fuel flowrate information every 36 seconds. The fuel flow rate indicated will be an average flow rate which was measured during the update cycle.

2-3 NORMAL OPERATION

The function of the SY-100 Naval Fuel Flowmeter System is to provide information on fuel oil consumption to ships company. The SY-100 Naval Fuel Flowmeter System permits the accounting of fuel consumption by monitoring the results of efforts to improve operations efficiency directed toward fuel.

The SY-100 Naval Fuel Flowmeter System is automatic in operation. The rate of fuel consumption is displayed on the gallons per hour (GPH) flow rate indicator. This display may be viewed at anytime. The indication represents the average rate of fuel consumption during the last 36 seconds of an hour.

The total gallons of fuel consumed is displayed on two separate total fuel used indicators; one resettable and one non-resettable. The displays are used to record the total quantity of fuel consumed over. an extended period of time. The RESETTABLE GALLONS display may be cleared to 000000 by depressing a RESET button to the left of the display. The NON-RESETTABLE GALLONS display accumulates the total quantity of fuel consumed and cannot be cleared.

Procedures necessary to enable personnel to effectively use the equipment are based on the goals of the intended tasks.

The SY-100 Naval Fuel Flowmeter System may be used in the following tasks:

1. General purpose fuel flow measurement.
2. Monitoring of Energy Conservation Efforts.
3. Watch, daily or passage total fuel consumption reporting.
4. Total fuel flow usage during tour.
5. Fuel flow rate monitoring during boiler efficiency testing.
6. Fuel flow measurement interface for a centralized data acquisition system for propulsion plant system evaluation.

2-4 INITIAL ADJUSTMENTS

NOTE

> There are no operator requirements to establish initial adjustments and control settings for this system. All adjustment shave been performed during the factory calibration or prior to and during installation.

The electronics unit shall be calibrated for use with a particular flow sensor. The two items form a calibrated pair. Adjustments to the electronics unit must be made whenever the Flow Sensor is recalibrated or rebuilt.

A calibration constant termed the “K-FACTOR” appears on the label of each flowmeter and flowmeter internals kit.

The electronics unit has an internal switch array termed the SYSTEM FACTOR which is used to enter a calibration setting for the system. This switch array is depicted in Figure 2-2.

The SYSTEM FACTOR setting to be entered is computed using Equation 2-1 given the K-FACTOR" for flow sensor to be used.

(Equation 2-1) SYSTEM FACTOR = 100/K-FACTOR

The range of settings is from .0000 to .9999, with a typical number of approximately .2100.

Entry of the SYSTEM FACTOR will automatically calibrate the RESETTABLE GALLONS, NON-RESETTABLE GALLONS, GALLONS PER HOUR displays and the auxiliary output.

2-5 START-UP PROCEDURES

There are no special start-up procedures for this system. Operation of the system is automatic once power is applied.

Fuel flow information will be presented to the operator automatically on the three display devices. The auxiliary output presents information to the remote data acquisition system automatically.

When power is applied, there is a delay of 36 seconds before the first gallons per hour and auxiliary output fuel flow rate readings are generated.

2-6 INFREQUENT MODES OF OPERATION

In normal operation of most vessels, a flow rate overrange of the auxiliary output should not occur. However, this condition may occur in certain class ships. A special provision has been made to respan the auxiliary output of 0 to 4500 GPH for such cases. This respanning is accomplished by removal of a jumper on the PCA-131 Printed Circuit Assembly. See section 6-3 for additional information on this feature.

2-7 ABNORMAL AND CASUALTY MODES

NOTE

> The Naval Fuel Flowmeter System is a non critical system. The flow sensor is a fail safe construction, so that in the event of a stalled rotor, fuel will not be blocked nor will damage occur to equipment down stream of the flow sensor.

The SY-100 Naval Fuel Flowmeter System may be over ranged by fuel oil flowrates up to 7200 gallons per hour. The auxiliary output will be out of range during this interval but the indicators will accurately indicate the fuel consumption rate and total. Normal operation of the auxiliary output will occur when the flow rate is within the calibrated range of 180 to 3600 gallons per hour.

The flow sensor is constructed to allow free passage of debris not filtered from the fuel by the fuel strainer. In the event foreign debris within the flow sensor results in a stalled rotor condition, all flow information will be lost until the flow sensor is removed from the fuel line and cleaned.

A failure of a single display device will leave operational the other indicators and the auxiliary output for most failures.

Electrical interference or “noise pickup” may occur during periods of no flow. Review section 8-7-2 should this condition occur.

2-8 SHUTDOWN PROCEDURES

The SY-100 Naval Fuel Flowmeter System is intended to remain powered and operating at all times. Therefore, there is no recommended shutdown procedure.

The SY-100 Naval Fuel Flowmeter System may be shutdown by turning off the power to the unit at a remote power distribution station.

If the auxiliary output is being utilized by a remote data acquisition system, turning off the power may result in a fuel flow system failure alarm.

Procedures for servicing of the system are described in section 6 of this manual.

2-9 EMERGENCY SHUTDOWN PROCEDURE

Conditions may develop where it is necessary to perform an emergency shutdown of the SY100 Naval Fuel Flowmeter System. Such emergency conditions may include a fuel leak at the flow sensor mating connections or damage to an electrical cable associated with the system.

It is suggested that the power to the SY-100 Naval Fuel Flowmeter System be turned off at the remote power distribution panel as a first ,step of any emergency shutdown.

It is recommended that the Power Connector be unplugged from the electronics unit before servicing the system. See Section 6 of this manual for further instructions.

Replacement of defective gasketing will require interruption and safe drainage of the fuel lines. See Section 6 of this manual for detailed instructions.

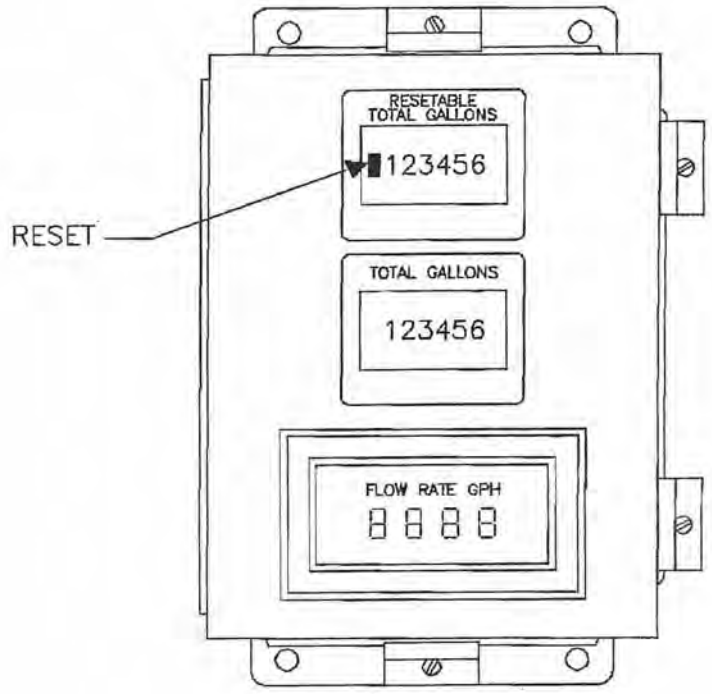

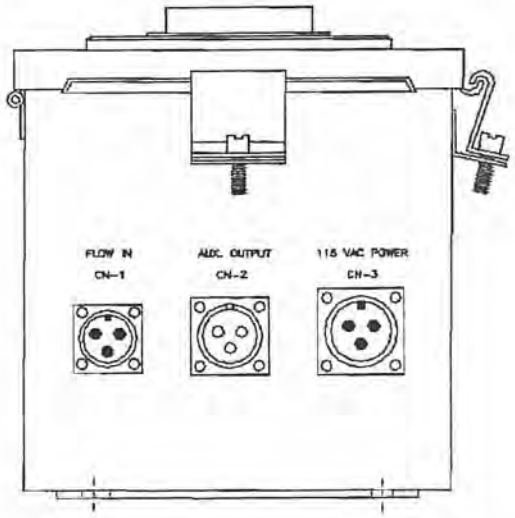

FIGURE 2-1 CONTROLS AND INDICATORS

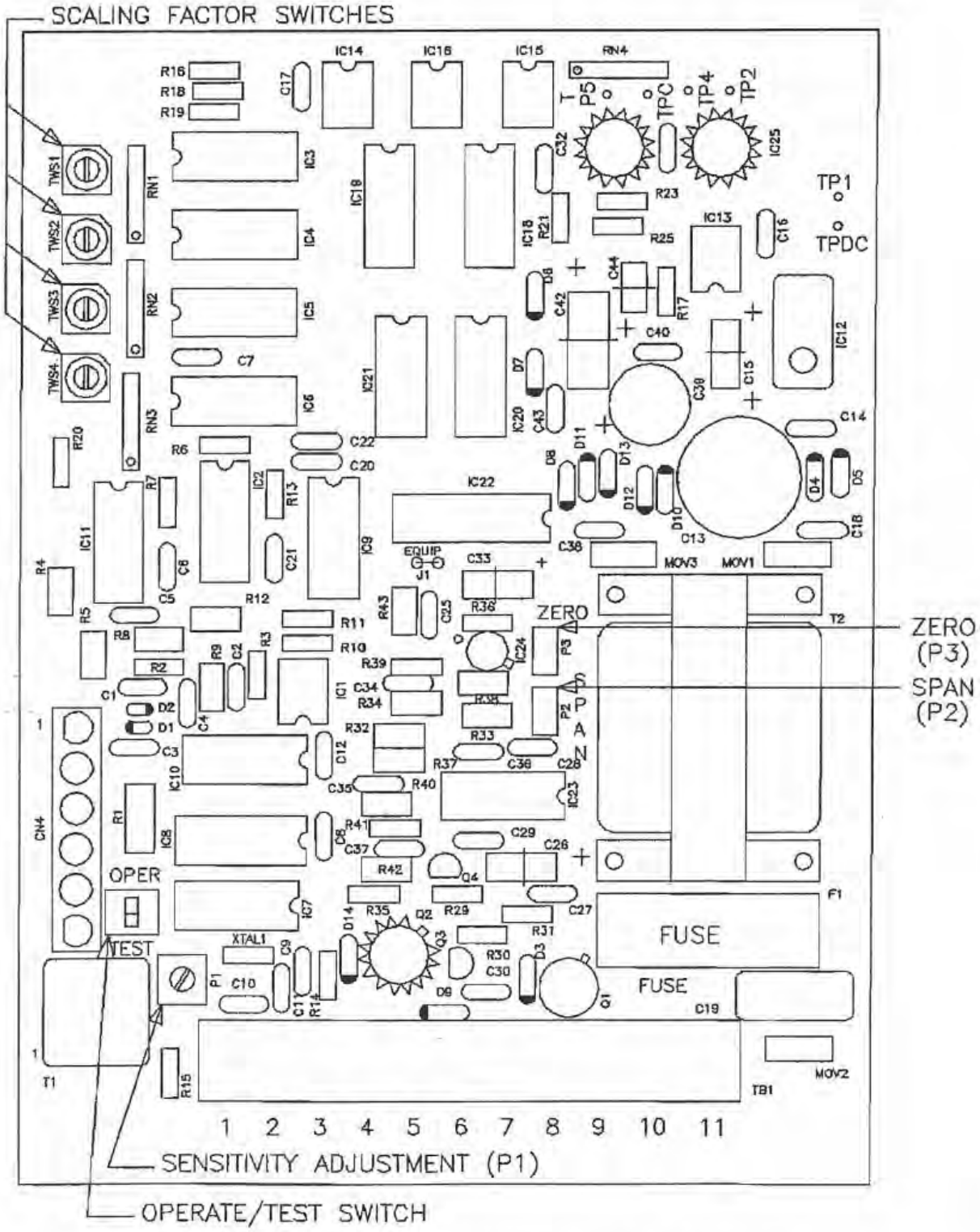

FIGURE 2–2 ELECTRONICS UNIT CONTROLS

THIS PAGE INTENTIONALLY LEFT BLANK

CHAPTER 3

FUNCTION DESCRIPTION

3-1 INTRODUCTION

The SY-100 Naval Fuel Flowmeter System is composed of two principle components. These are the model HO-l-l/2-SY-100 flow sensor and the model 47-SY-100 electronics unit. The user supplied interconnecting cabling completes the SY-100 Naval Fuel Flowmeter System. The principle components are illustrated in Figure 3-1.

The SY-100 Naval Fuel Flowmeter System is intended to provide ships company with fuel flow and consumption information.

3-2 PRINCIPLE OF OPERATION

A block diagram showing the principal components, is depicted in Figure 3-1. The principle of operation may be summarized as follows.

The Turbine Flow Sensor is installed within the fuel oil piping system. It is used to measure the fuel oil flow. It is interconnected by means of a signal cable to the model 47-SY-100 electronics unit.

The model 47-SY-100 electronics unit provides visual displays of the flow information and generates an auxiliary output for transmission to a remote data acquisition system. This output provides a 4-20 mA DC signal proportional to flow rate. This signal may be used to transmit flow rate information to a remote data acquisition system. The use of this feature in actual operation is optional.

3-3 FLOW SENSOR PRINCIPLE OF OPERATION

The turbine flow sensor consists of a multiple vaned rotor assembly which is supported on a shaft held in place by rotor supports within the flowmeter housing.

The rotor is free to spin on a carbide sleeve bearing. A magnetic pickup coil is positioned on the exterior of the flow-meter housing above the rotor. These components are shown in Figure 3-2.

As the fuel oil passes through the flowmeter it causes the vaned rotor assembly to spin at a rate proportional to the fuel oil flow rate.

The pickup coil generates a pulsing signal as the rotor spins. The frequency of this signal is proportional to flow rate while summation of this signal is proportional to flow total.

The number of pulses produced per gallon by the flow sensor is termed the calibration factor or K-Factor. This calibration factor is marked on the equipment label for each flow sensor and is unique to that particular flow sensor.

3-4 ELECTRONICS UNIT PRINCIPLE OF OPERATION

The electronics unit receives the signal from the flowmeter pickup coil and scales the information to provide indication of flow total and flow rate. A conditioned analog output signal proportional to flow rate is also generated. This later signal is intended for use by a centralized data acquisition system.

A block diagram of the electronics unit is depicted in Figure 3-3. The electronics unit consists of an electronics enclosure, a PCA-131 printed circuit assembly, a PCA-130 printed circuit assembly and two electromechanical counters with interconnecting wiring.

The electronics unit requires 115 VAC 60 Hz power. Power enters the electronics unit at connector CN-3. Over-current protection is provided by a fuse (F1). The input power is then passed through a power filter before being converted to the necessary DC operating voltages used by the internal circuitry. A power on reset circuit initializes the time base after a power interruption or during a low power condition to avoid erratic behavior.

The pulsing signal produced by the flow sensor enters the electronic unit through connector CN-l. The frequency signal is then passed through an isolation transformer which provides a DC isolation for the flowmeter signal input.

In normal operation, the Operate/Test switch is in the operate position. The signal passing through the switch is the bandpass-filtered and conditioned by a Schmitt trigger circuit into the logic level necessary for processing by the remaining digital circuitry.

The frequency signal is then processed by a scaling factor whose setting has been determined by the calibration factor or K-Factor for the flow sensor. There are 100 pulses produced for each gallon of fluid passing through the flow sensor at the output of the scaling factor. The scaling factor setting is the primary calibration setting for the electronics unit.

The signal at the output of the scaling factor is then divided by 100 so that the resulting output will be 1 pulse per gallon. This pulse is fed to a counter driver circuit which provides the electrical pulse necessary to advance the resettable and non-resettable electromechanical counters. These counters provide the indication to the user of flow total.

The digital time base is at the heart of the flow rate measurement circuitry for both flow rate display indication and analog output generation. The digital time base is crystal oscillator based for precise timing. The time base provides a latch and a reset pulse, each 36 seconds. These signals are used by both the flow rate indicator and auxiliary output circuitry. A test frequency of 256 Hz is also generated as an internal calibration source.

The flow rate display driver is a circuit which counts the output pulses from the scaling factor which are 100 pulses per gallon for 36 seconds. At the end of this interval the resulting measurement is latched into the display driver for indication to the user and the measurement cycle reset and repeated. The GPH flow rate display consists of LEDS 1-4. The LED flow rate display will indicate the flow rate in gallons per hour.

The auxiliary output circuitry accepts the 100 pulses per gallon from the scaling factor and the latch and reset pulses from the digital time base.

A binary counter is used to accumulate the pulses from the scaling factor for a period of 36 seconds. At the end of this period the contents of the binary counter are latched into the input of a D/A converter. The binary counter is reset and the next measurement cycle begins.

The digital to analog converter produces an analog voltage output signal proportional to flow rate. This analog voltage output signal is then buffered and converted by the analog output stage into a 4 to 20 mA DC signal before being delivered to the terminals of connector CN-2. Span and zero controls are provided to permit the trimming of the analog output to obtain the desired current output span and zero.

The reference supply provides the necessary precision reference voltage required by the digital to analog converter for accurate conversions and long term stability.

The auxiliary 4 to 20 rnA DC output is isolated from the chassis and power grounds by means of transformer isolation and from the remainder of the circuitry by opto-isolated techniques.

The operation of the electronics unit in the calibration mode is similar to operation in the operating mode. However, a precision calibration frequency of 256 Hz derived from the digital time base is injected into the flow input in place of the flowmeter signal. The span and zero controls can then be trimmed to obtain the desired auxiliary output calibration set points without requiring special signal generation and frequency measurement test equipment.

Recalibration for use with a replacement flowmeter internals kit requires only the entry of a new scaling factor setting. The analog output controls for span and zero need not be adjusted. A spare fuse is provided in the event the main fuse blows. This spare fuse is conveniently stored on the PCA-130 printed circuit assembly.

The electronics enclosure provides the required mechanical support and environmental protection required for the electronic subassemblies.

The flow rate display is interconnected to the PCA-131 printed circuit assembly by means of an interconnecting cable.

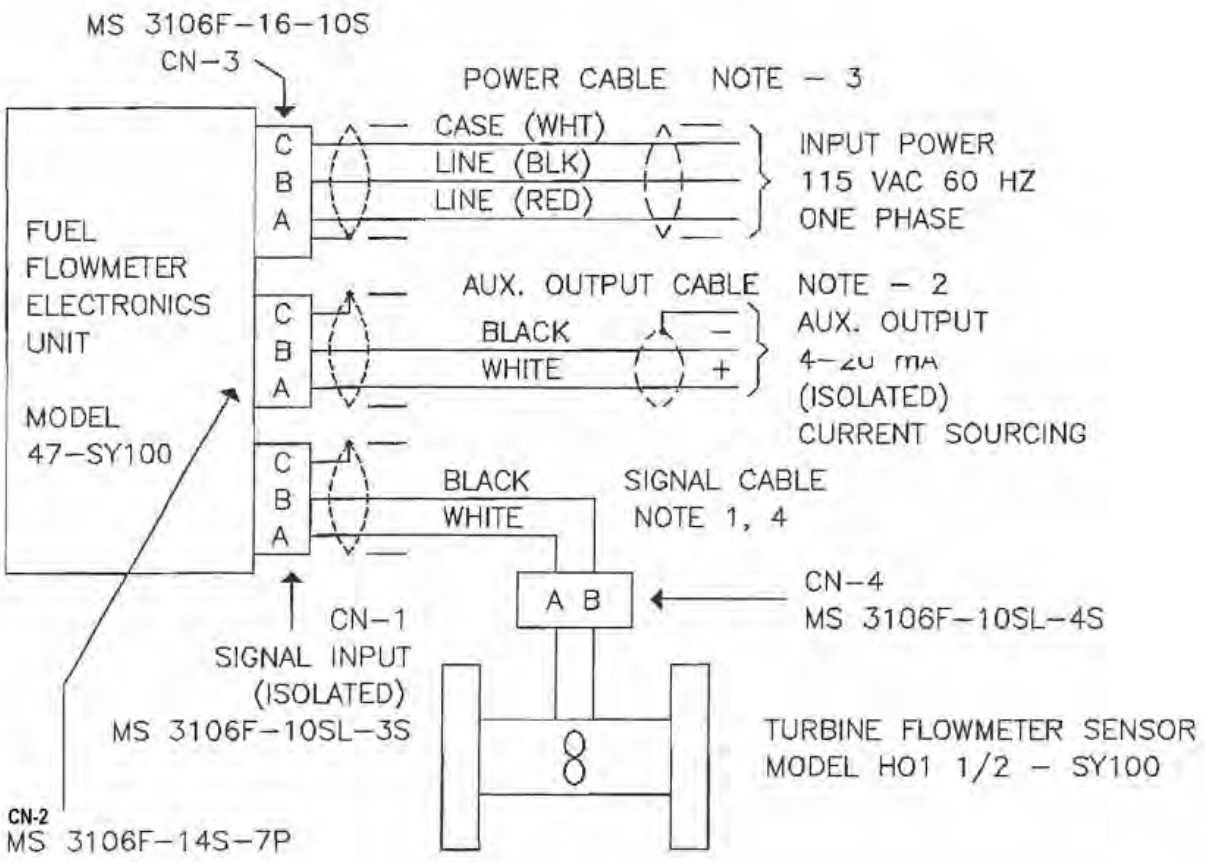

NOTES

1. SIGNAL CABLE (USER SUPPLIED) SHALL BE MIL-W-16878, 18 AWG BRAIDED SHIELDED TWISTED PAIR SUITABLE FOR MIL-STD-461.
2. AUX. OUTPUT CABLE (USER SUPPLIED) SHALL BE MIL-W-16878 18 AWG BRAIDED SHIELDED TWISTED PAIR, SUITABLE FOR MIL-STD-461 (GROUND SHIELD BOTH ENDS).
3. POWER CABLE (USER SUPPLIED) SHALL BE MIL-W-16878 14 AWG 3 WIRE, BRAIDED SHIELDED TWISTED.
4. SHIELDS SHALL BE GROUNDED AT ONE END ONLY, PREFERABLY AT THE ELECTRONICS UNIT.
5. POWER SHALL BE 115 VAC 60 HZ TYPE-1, UNGROUNDED, SINGLE PHASE.
6. AUX. OUTPUT RATING, TYPE - CURRENT SOURCING ISOLATED 4-20 mA OUTPUT, MAXIMUM LOAD RESISTANCE 500 OHMS.

FIGURE 3-1 INTERCONNECTING ELECTRICAL WIRING

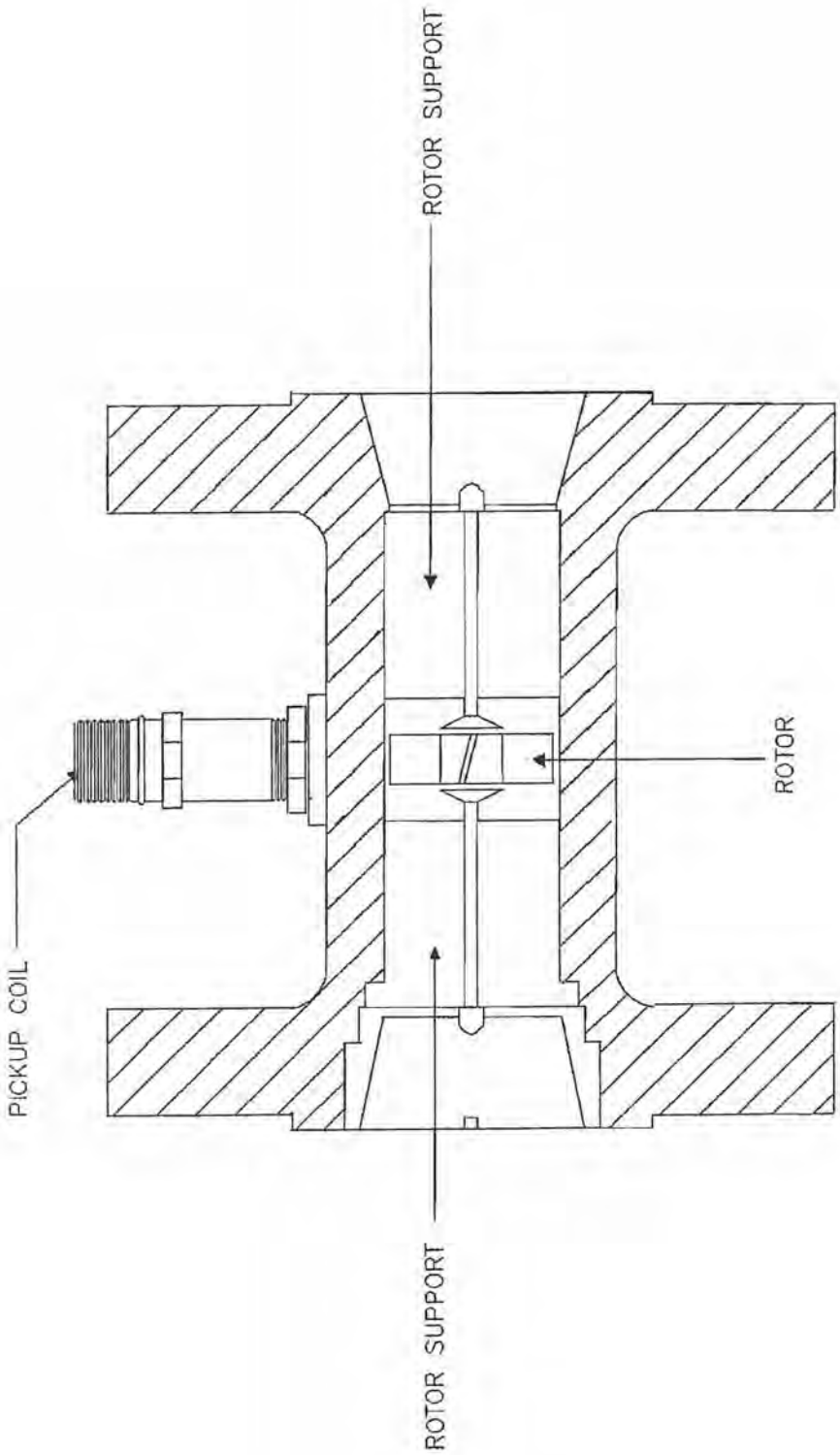

FIGURE 3-2 FLOW SENSOR PRINCIPLE OF OPERATION

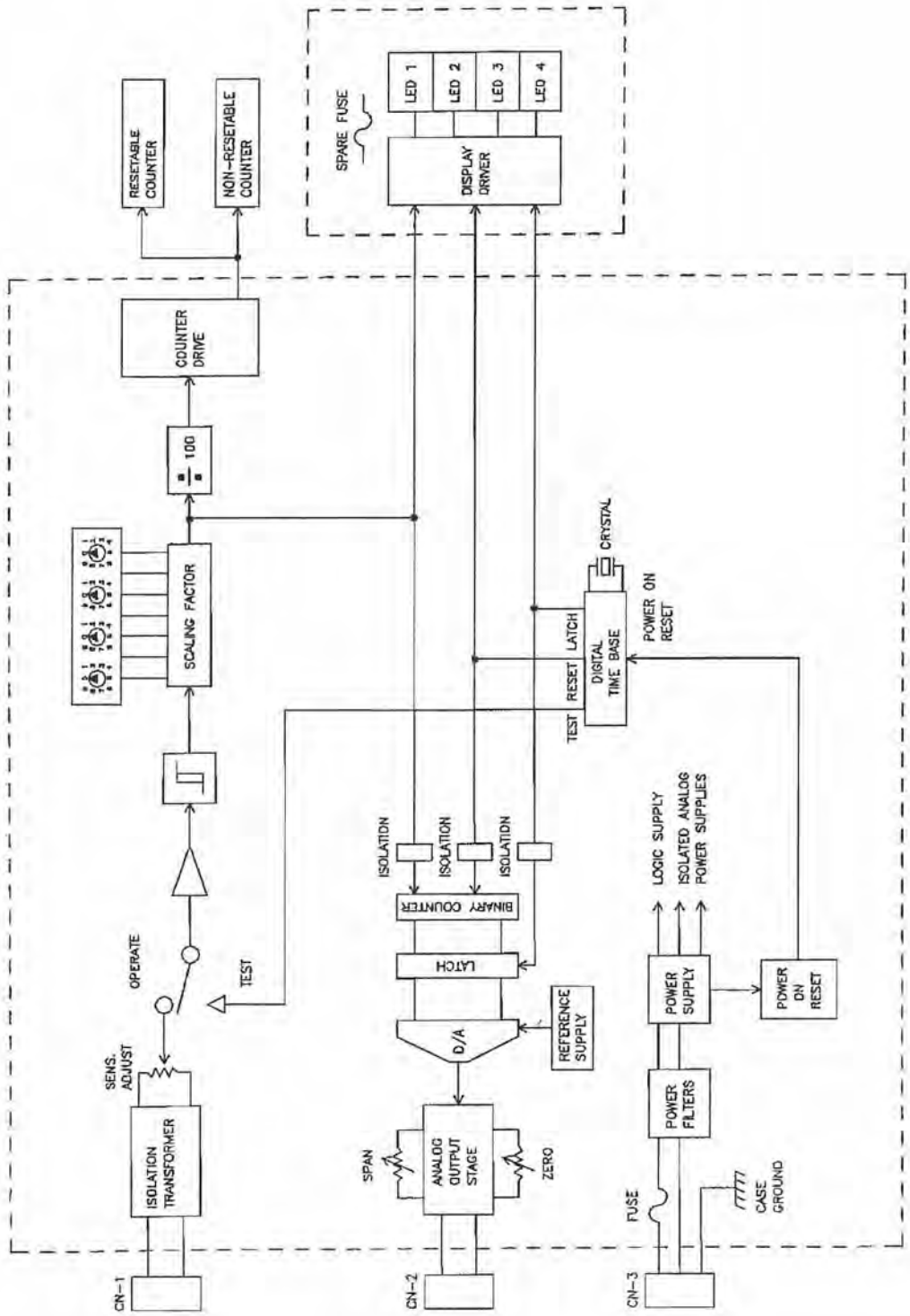

FIGURE 3-3 BLOCK DIAGRAM 47-SY100

THIS PAGE INTENTIONALLY LEFT BLANK

CHAPTER 4

PREVENTATIVE MAINTENANCE

4-1 INTRODUCTION

This section provides a description of the cleaning and inspection procedure applicable to the flow sensor portion of the SY-100 Naval Fuel Flowmeter System.

The SY-100 Naval Fuel Flowmeter System is not intended to require regularly scheduled preventative maintenance.

Observe any scheduled organized level maintenance instructions dictated by the requirements of the Planned Maintenance System (PMS) established by the Naval Sea System Command for fuel system components.

CAUTION

Do not allow fuel spills when servicing the flow sensor. Isolate and drain the fuel line prior to starting any work. Observe all safe practices during performance of the maintenance and cleaning operations. Avoid electrical shock. Turn off the power to the Electronics Enclosure before beginning work on the Naval Fuel Flowmeter System.

4-2 FLOW SENSOR CLEANING

Fibrous debris in the fuel system which is passed by the fuel strainer over a period of time may tend to accumulate in the fuel flow sensor.

Such an accumulation of matter may result in a deterioration in performance or a stalled rotor condition if not cleaned periodically.

NOTE

The recommended spanner wrench or equal is required to disassemble and remove the internals kit from the flow sensor housing.

The recommended cleaning procedure applicable to the fuel sensor is presented in the following steps. This operation requires interruption of the service line, and as such be scheduled in advance.

NOTE

> The calibration of the SY-100 Naval Fuel Flowmeter will be impaired if any of the rotor blades are lost or bent. Observe special handling to avoid damage to this assembly during cleaning operations.

Isolate and drain the fuel system prior to removal of the internals kit.

Disconnect the signal cable (CN-4) from the flow sensor pickup coil.

Remove the eight flange mounting bolts. Take the flow sensor from the line.

Study Figure 4-1 prior to disassembling the flow sensor. Use the spanner wrench to remove the retaining nut on the flowmeter inlet. The internals kit may now be removed from the flowmeter housing.

The upstream flow straightener and spacer are a slip fit on the shaft and may now be removed from the internals kit.

Remove any fibrous matter which may be attaching itself on the rotor blades or wrapped about the shaft on either side of the rotor.

The internals kit may be cleaned in a turbine oil, solvent, PT-37 alcohol or trichlorethane to remove sticky residue.

4-3 FLOW SENSOR INSPECTION

The following is a summary procedure for inspection of the flow sensor internals kit. The procedure is intended to assist in the assessment of the state of wear of the internals kit.

The accumulative effects of mechanical wear and chemical attack may result in a deterioration of the flow sensor's bearing surfaces over a period of years.

This bearing deterioration may manifest itself in a flow measurement inaccuracy or in a stalled rotor condition.

Examine the flowmeter kit after performing the cleaning procedure listed in paragraph 4-2. Perform the following examination steps to determine if the internals kit is operating satisfactory or should be replaced at this time.

Lubricate the flowmeter kit with clean turbine oil.

The rotor should freely spin on the shaft for several seconds when spun.

Examine the internals kit for signs of excessive bearing wear using the criteria shown in Figure 4-2.

If replacement is suggested follow the procedure outlined in section 6 of this document.

4-4 LUBRICATION

There are no lubrication requirements applicable to the SY-100 Naval Fuel Flowmeter System.

4-5 FLOW SENSOR ASSEMBLY

Slip the spacer onto the downstream flow straightener. Align the upstream flow straightener with notches on the spacer and slip onto shaft.

Insert the assembled internal kit (figure 4-1) into the flow meter housing. Apply threadlocking adhesive #242 (blue) to the retaining nut and thread into the housing.

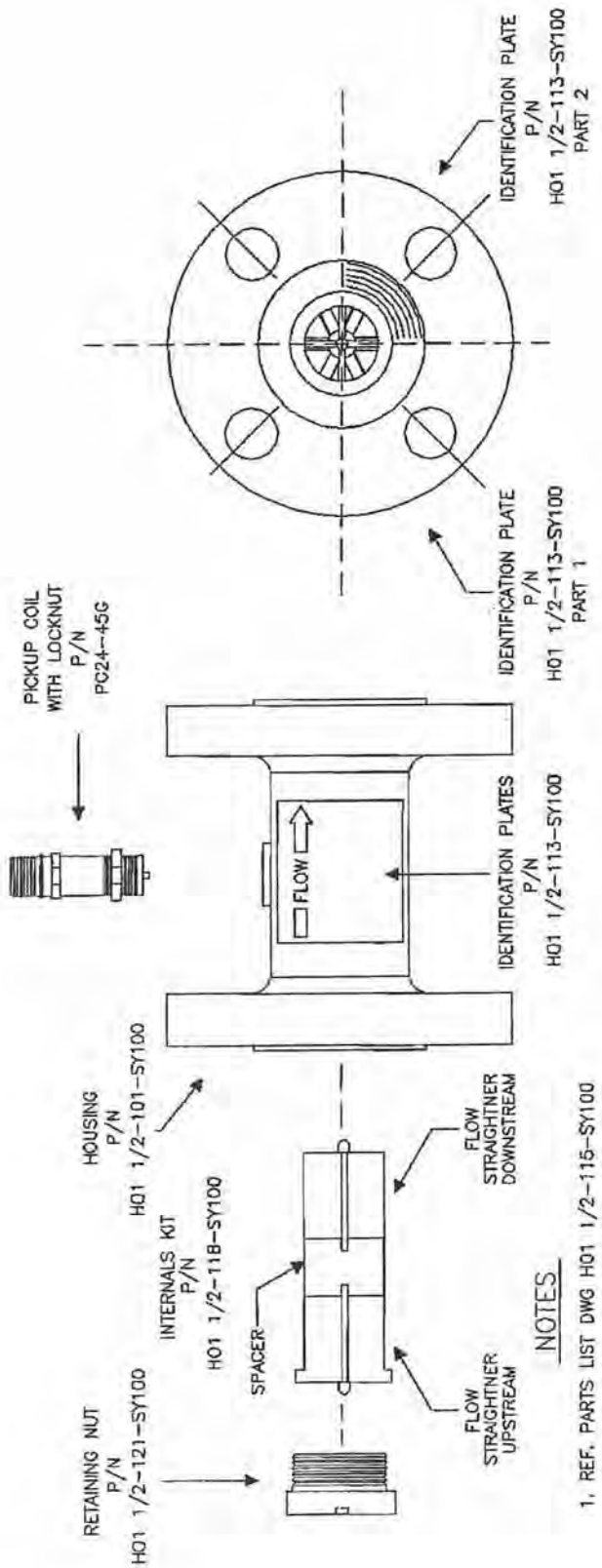

FIGURE 4-1 FLOW SENSOR DISASSEMBLY

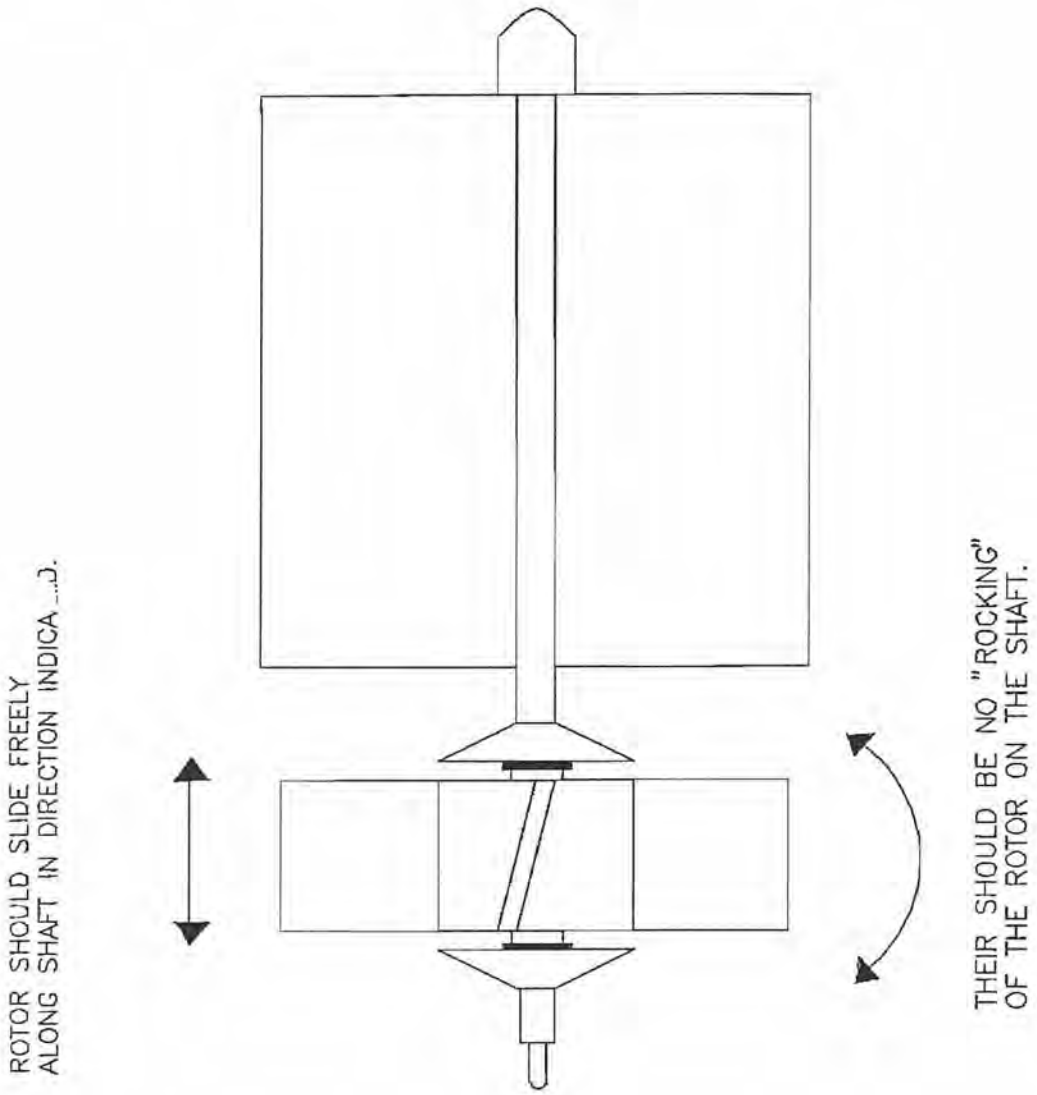

FIGURE 4-2 INSPECTION OF INTERNALS KIT

THIS PAGE INTENTIONALLY LEFT BLANK

CHAPTER 5

TROUBLESHOOTING

5-1 INTRODUCTION

The troubleshooting techniques in this chapter are designed to isolate and locate the area of failure and explain in the procedure for replacement of subassemblies to make the system operational.

5-2 TROUBLESHOOTING PROCEDURES FLOW SENSOR

The required test equipment for troubleshooting the flow sensor is as follows:

1. Digital Multimeter: Fluke model 8060A or equal.

In the event of signal failure (no flow indication) the following procedure will be followed. In each case proceed to the next instruction only if the defect is not found. Refer to Figure 5-1 for a fault-logic diagram of the flow sensor.

1. Visually examine the interconnecting signal cable for obvious broken leads or shorted leads. This will be performed by a continuity check.
2. Disconnect the signal cable from the 47-SY-IOO electronics unit at CN-l and from the flow sensor at CN-4. See figure3-1 for location. Measure the resistance from pin A of CN-l to pin A of CN-4, a short (zero ohms) should be measured. Repeat above from pin B to pin B. If defective replace or repair.
3. With the signal cable disconnected from the flow sensor at CN-4, measure the DC resistance of the pickup coil. The resistance should read between 1120 and 1680 Ohms between pin A to pin B. A short or an open circuit indicates a defective pickup coil and should be replaced.
4. With an established flow rate, configure the digital multimeter to measure AC volts, using the two volt scale. Connect positive lead to Pin A of pickup coil and negative lead to pin B of pickup coil. Depending on the flow rate an approximate voltage reading of 10 millivolts to 1 volt should be measured. If zero volts are measured, a stalled rotor condition is indicated. Remove the flow sensor from the piping as discussed in section 4-2.
5. If no difficulty is found in the flow sensor proceed to the following section for troubleshooting procedures of the electronics unit.

5-3 TROUBLESHOOTING PROCEDURES ELECTRONICS UNIT

CAUTION

Electrical safe practices must be observed during the servicing of the electronics unit to minimize the risk of electric shock.

The required test equipment for troubleshooting the electronics unit follows:

1. Digital Multimeter: Fluke model 8060A or equal.
2. Analog Multimeter: Simpson model 260 or equal.
3. Screw driver.
4. Nonmetallic alignment tool.

The troubleshooting techniques in this section are designed to isolate the failure and the required action to be taken. The information will be presented by listing the observed condition followed by the required action to correct the failure.

5-3-1 UNIT PROVIDES FLOW INDICATION WITH NO FLOW PRESENT

1. This symptom indicates the presence of noise pickup.

2. With the signal cable disconnected from the flow sensor at CN-4, measure the DC resistance of the pickup coil. The resistance should read between 1120 and 1680 Ohms between pin A to pin B. A short or an open circuit indicates a defective pickup coil and should be replaced.

3. With the interconnecting signal cable disconnected from the flow sensor (CN-4) and the electronics unit (CN-l),perform a continuity check using the digital multimeter. Measure the resistance from CN-I pin A to pin A of CN-4 and then from CN-I pin B to pin B of CN-4, a short should be measured in both cases. Also note that connector CN-l is equipped with a third pin, pin C. This pin provides the shield connection and should be checked for absence of shorts. Connect one test lead to CN-l pin C and then measure from pin C to A and then pin C to B, an open should be measured. Repair or replace the cable assembly as required.

4. Open the door of the electronics unit. Refer to figure 5-2 and locate the SENSITIVITY ADJUST (PI). Taking the nonmetallic alignment tool, slowly turn this adjustment CCW until false totalization and rate indication have stopped.

5-3-2 NO FLOW INDICATION WITH FLOW PRESENT

1. Verify that the pickup coil and interconnecting cabling are not the cause of the failure. Refer to section 5-3-1 paragraphs 2 and 3 for detail.
2. Open the door of the electronics unit. Refer to figure 5-2 and locate the SENSITIVITY ADJUST (PI). Taking the nonmetallic alignment tool, slowly turn this adjustment fully CW.
3. Turn the OPERATE/TEST switch to, the "TEST" position. This will inject a test signal of 256.0 Hz, which will give a flow indication of approximately 1900 GPH. Also, the flow totalizers will advance one count every two seconds. This indicates a normal functioning unit. Successful operation will indicate the possibility of a stalled rotor or damaged rotor in the fuel flowmeter, refer to section 4-2. Failure of this test will require the replacement of the PCA-13l printed circuit assembly repeat step 3. Replace PCA-130 printed circuit assembly as required.
4.

5-3-3 NO ANALOG OUTPUT

1. In the event of an analog output failure, verify the interconnecting cable for an open circuit or a short circuit.
2. Check the wiring from CN-2 to the terminal block for breaks.
3. Replace the PCA-131 printed circuit assembly and proceed to section 6-2.

5-3-4 DISPLAY NOT LIT WITH POWER APPLIED

CAUTION

Electrical safe practices must be observed during this procedure to minimize the risk of electrical shock.

1. Verify that 115 V AC 60 Hz power is properly wired and connected to CN-3. Verify the wiring from CN-3 to the terminal block.

2. Turn power off to the electronics unit and remove fuse Fl. With the digital multimeter measure the resistance of the fuse. A good fuse will measure approximately 5.0 Ohms. A blown fuse will measure an open circuit. Replace fuse Fl as required. Turn power on.

3. Connect the digital multimeter to TPDC (negative) and TPI (positive). A voltage of +5.0 volts +/-0.5 volts should be measured. Absence of this voltage indicates failure of the PCA-131 printed circuit assembly. Refer to figure 5-3 for removal.
4. Failure of the display to light after successful completion of step 3 indicates a defective PCA-130 printed circuit assembly. To replace the PCA-131 printed circuit assembly locate the 5 10-32 mounting screws and remove. The PCA-131 printed circuit assembly may now be removed. Replace in reverse order.

5-3-5 TOTALIZER COUNTER WILL NOT ADVANCE WITH FLOW

1. For troubleshooting of the counters an analog multi-meter will be required.
2. Place the OPERATE/TEST switch to the TEST position and observe that the flow rate indicator is operational.
3. Connect the analog multimeter to TPDC (negative)on PCA-130 printed circuit assembly and the positive lead to terminal block position 7. You should measure +10.0 volts +/ 3.0 volts, connect positive lead to terminal B. You should measure +10.0 volts +/-3.0 volts. Also at terminal 8 observe a two volt needle deflection as each pulse is received by the counter. Failure to observe this pulse may indicate the following:

   A. An open circuit interconnecting cable. Perform a continuity check of the cable, CA-47.

   B. A shorted or open coil. Disconnect the connector from the counter and measure the DC resistance. A resistance of 40 Ohms +/-10% should be observed. Failure to obtain this measurement will require replacement of the counter.

   C. Defective PCA-131 printed circuit assembly. Replace as discussed in 5-3-4 step 3.

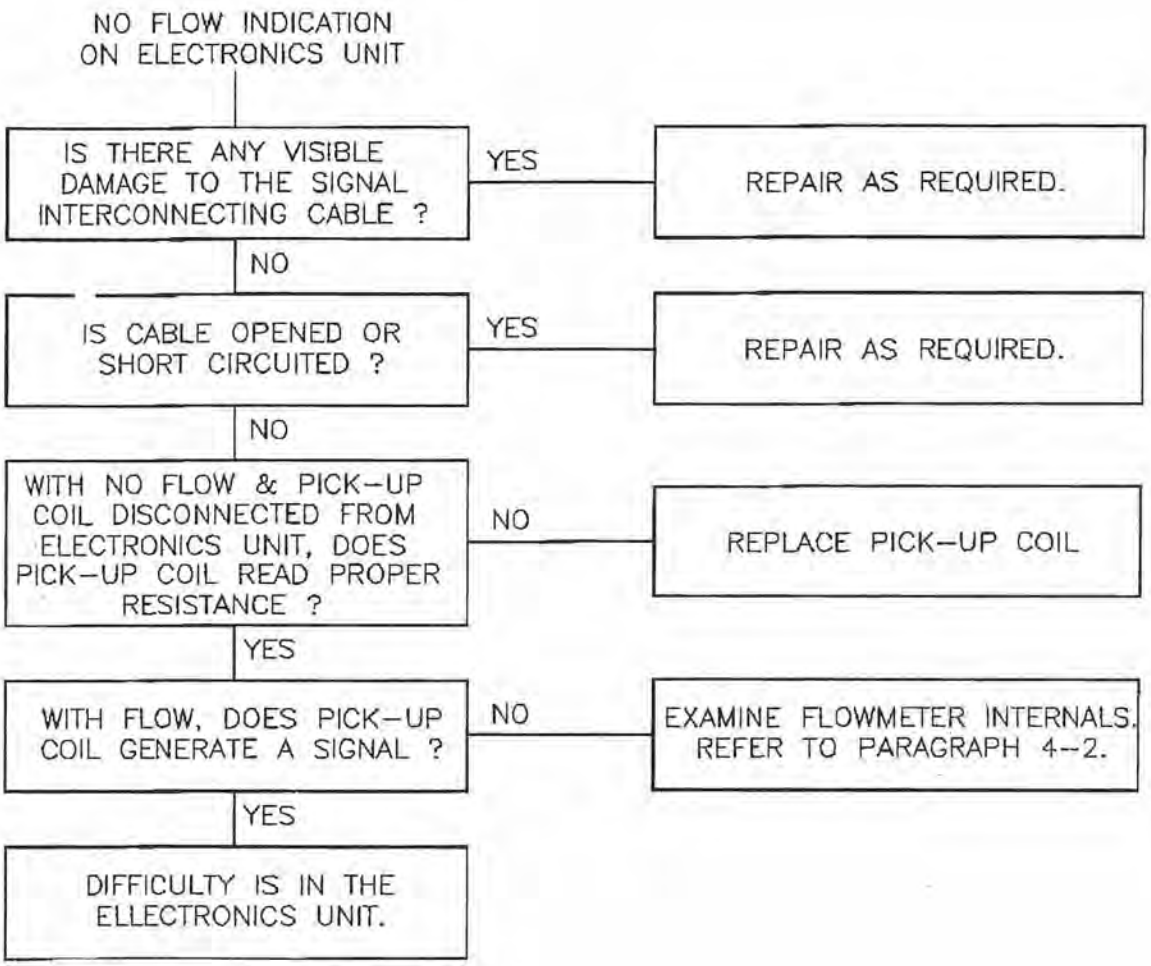

FIGURE 5-1 FLOW SENSOR FAULT LOGIC DIAGRAM

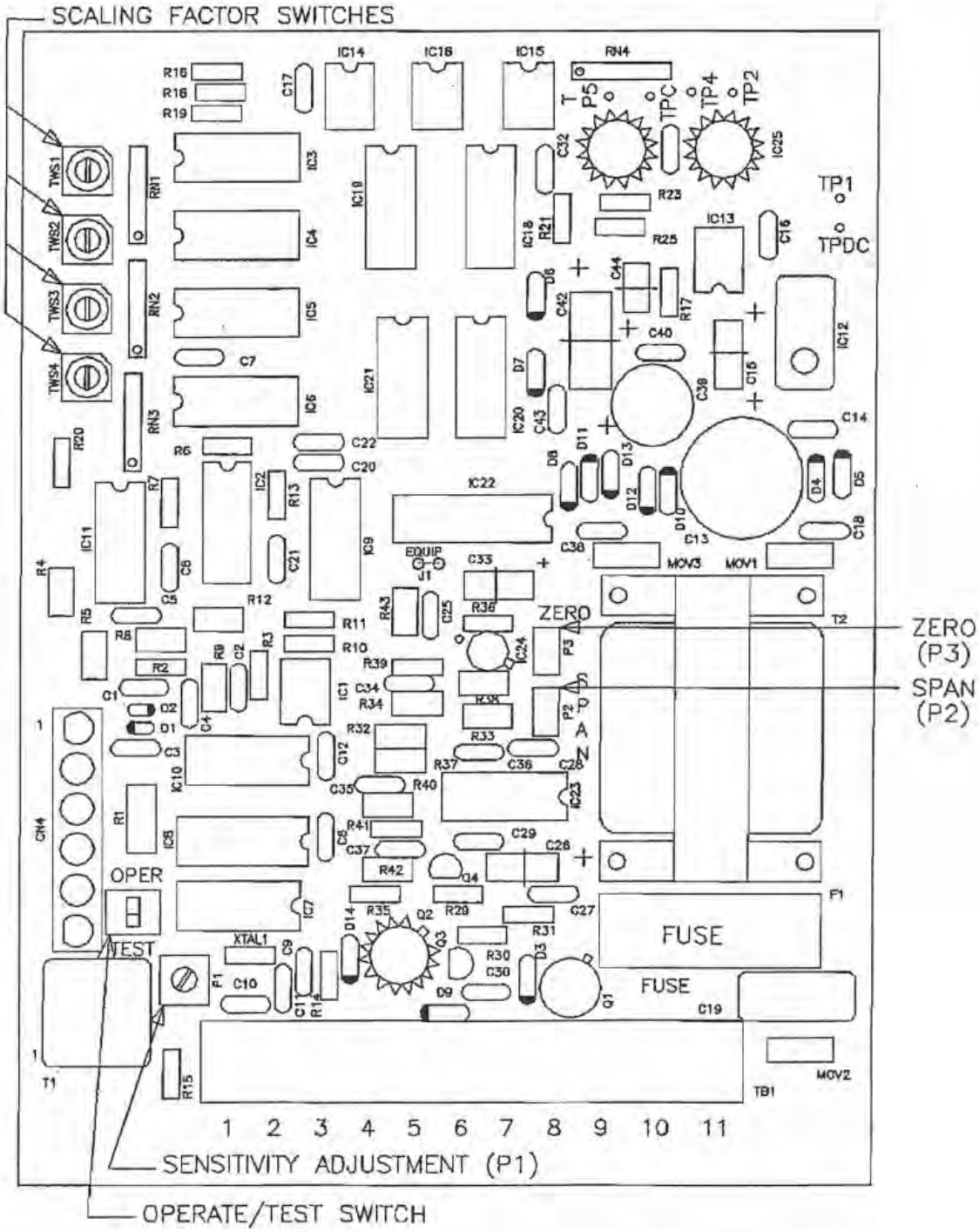

FIGURE 5-2 ELECTRONICS UNIT CONTROLS

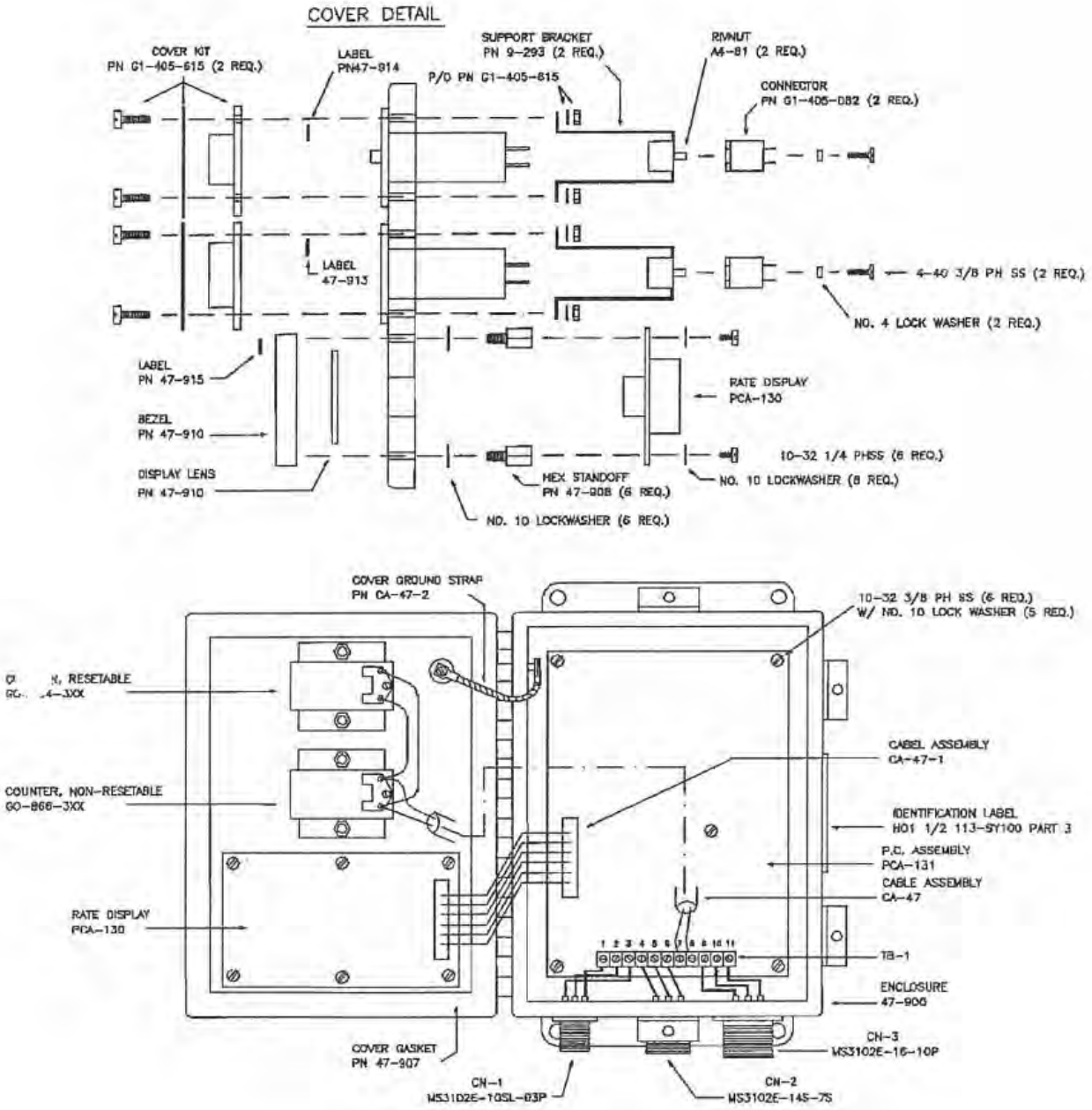

FIGURE 5-3 47-SY100 ELECTRONICS UNIT

THIS PAGE INTENTIONALLY LEFT BLANK

CHAPTER 6

CORRECTIVE MAINTENANCE

6-1 INTRODUCTION

The corrective maintenance procedures are intended to provide the user with the necessary procedures to adjust, repair and reinstall the SY-100 Naval Fuel Flowmeter System.

The required test equipment and tools necessary to perform corrective maintenance are as follows:

1. Digital Multimeter: Fluke model 8060A or equal.
2. Spanner wrench.
3. Screw driver; 1/4" blade standard.
4. Nonmetallic alignment tool.

The information will be presented by listing the observed condition followed by the required action to be taken.

6-2 ALIGNMENT OF ELECTRONICS UNIT

CAUTION

Electrical safe practices must be observed during this procedure to minimize the risk of electrical shock.

1. From the identification plate on the flow sensor locate and record the K-FACTOR.
2. Using the following equation, determine the setting of the SCALING FACTOR switches: SCALING FACTOR = 100/K-FACTOR

Example: The K-FACTOR is determined to be 481.982.

SCALING FACTOR = 100/481.982

= 0.2075

NOTE: Use 4 significant digits for the scaling factor.

Dial into the SCALING FACTOR switches, the calculated numbers follow:

Dial 2 into switch TWSl
Dial 0 into switch TWS2
Dial 7 into switch TWS3
Dial 5 into switch TWS4

Once this procedure is completed it will successfully calibrate the flow totalizers and flow rate indicator.

NOTE

The analog output full scale is typically set at the full flow rate as indicated on the identification tag. This corresponds to a full scale flow rate of 3600 GPH or 60 GPM.

3. Using the K-FACTOR of the flow sensor, determine the full scale frequency at the desired full scale flow rate in GPH. This is calculated by the following equation:

   FULL SCALE FREQUENCY = K-FACTOR X GPH / 3600

   Example: K-FACTOR is 481.982 and the full scale flow rate is 3600 GPH.

   FULL SCALE FREQUENCY = 481.982 X 3600 / 3600
   = 481.982 Hz

4. Calibration of the analog output will require the OPERATE/TEST switch to be turned to the TEST position and a digital milliamp meter connected across pins A and B of CN-2.
5. Adjust the SPAN (P2) to the desired output setting as calculated by the following equation:

   ANALOG OUTPUT = (FTEST/FULL SCALE FREQUENCY) X 16 + 4

   WHERE FTEST IS THE TEST FREQUENCY OF 256.0 Hz

   Example:

   ANALOG OUTPUT = (256.0/481.982) X 16 + 4
   = 12.498 milliamps

6. Momentarily turn off or disconnect the line power then reapply the line power. This will cause a resetting to zero of the rate indicator and the analog output. Adjust the ZERO adjustment to obtain a reading of 4.00 MA DC, at zero GPH. If 4.00 MA DC is not set within 36 seconds, turn power off momentarily.

7. Repeat steps 5 and 6 until no noticeable change is observed.

6-3 SPECIAL ANALOG RANGE SETUP

The SY-100 Naval Fuel Measurement System has been equipped with a special provision for modifying the analog output full scale. The range may be changed to provide an analog signal of 4 to 20 MA DC proportional to 0 to 7200 GPH. The following discussion will provide the details of how this may be accomplished:

1. Disconnect the power cable from CN-3 and open the enclosure.
2. Locate jumper Jl on the PCA-131 printer circuit assembly and remove from the circuit board.
3. Using the K-FACTOR of the flow sensor determine the full scale frequency at the desired full scale flow rate in GPH. This is calculated by the following equation:

   FULL SCALE FREQUENCY = K-FACTOR X GPH / 3600

   Example: K-FACTOR is 481.982 and the full scale flow rate is 7200 GPH

   FULL SCALE FREQUENCY = 481.982 X 7200 / 3600
   = 963.964 Hz

4. Calibration of the analog output will require the OPERATE/TEST switch to be turned to the TEST position and a digital milliamp meter connected across pins A and B of CN-2.
5. Adjust the SPAN (P2) to the desired output setting as calculated by the following equation:

   ANALOG OUTPUT = (FTEST/FULL SCALE FREQUENCY) X 16 + 4

   WHERE FTEST IS THE TEST FREQUENCY OF 256.0 Hz.

   Example: ANALOG OUTPUT = (256.0 / 963.964) X 16 + 4
   = 8.249 milliamps

6. Momentarily turn off or disconnect the line power1then reapply the line power. This will cause a resetting to zero of the rate indicator and the analog output. Adjust the ZERO (P3) adjustment to obtain a reading of 4.00 MA DC, at zero GPR. If 4.00 MA DC is not set with 36 seconds, turn power momentarily off.
7. Repeat steps 5 and 6 until no noticeable change is observed.

6-4 FLOW SENSOR REINSTALLATION PROCEDURE

CAUTION

Do not allow fuel spills when installing the flow sensor. Drain the fuel line prior to starting any work. Observe all safe practices during performance of the installation. Do not use the flow sensor body as a "Spool Piece" during welding operations during installation of the SY-100 Naval Fuel Flowmeter System.

Suitable fasteners for the flange ratings shall be obtained from ships stores in advance of starting the work. Suitable gaskets(two required) shall be prepared to match the bolt pattern and meter inlet bore.

The mating flange and piping segments shall be free of weld protrusions into the piping. Such obstructions may create turbulence and result in flow measurement errors.

The ships fuel piping shall be cleaned of all loose, foreign material and welding slag.

Orient the flow sensor into the ships piping observing that the flow direction marking on the flow sensor body matches the direction of fuel flow in the installation.

Position gaskets and align the flange bolts in such a position that the pickup coil shall be oriented to permit ease of assembly of the interconnecting cabling and is clear of obstructions.

Place nuts on all flange bolts and tighten securely. Place the prepared interconnecting cables on the pickup and tighten.

6-5 ELECTRONICS ENCLOSURE REINSTALLATION PROCEDURE

CAUTION

Electrical safe practices shall be observed during preparation and installation of the power cabling to the electronics unit to minimize risk of electrical shock.

Fasteners for mounting the electronics unit shall be obtained from ships stores in advance of starting the work.

Use of lock washers which provide additional electrical grounding between the enclosure and the mating surface is recommended. This will enhance electrical safety and electromagnetic compatibility.

Mount the electronics unit to the mounting surface using the fasteners. Tighten all fasteners securely.

Prepare the mounting holes for the strain reliefs for the interconnecting signal, auxiliary output and power cables.

6-6 FLOW SENSOR REMOVAL

NOTE

The recommended spanner wrench, or equal, is required to disassemble and remove the internals kit from the flow sensor housing.

The recommended cleaning procedure applicable to the fuel sensor is presented in the following steps. Note that this operation requires interruption of the service line and as such should be scheduled in advance.

NOTE

The calibration of the SY-100 Naval Fuel Flowmeter System will be impaired if any of the rotor blades are lost or bent. Observe special handling to avoid damage to this assembly during cleaning operations.

1. Isolate and drain the fuel system prior to removal of the internals kit.
2. Disconnect the signal cable CN-4 from the flow sensor pickup. Refer to figure 3-1.

3. Remove the mounting eight flange mounting bolts. Take the flow sensor from the line.
4. Study Figure 6-2 prior to disassembling the flow sensor. Use the spanner wrench to remove the retaining nut on the flowmeter inlet. The internals kit may now be removed from the flowmeter housing.
5. The upstream flow straightener and spacer are a slip fit on the shaft and may now be removed from the internals kit.
6. Remove any fibrous matter which may be attaching itself on the rotor blades or wrapped about the shaft on either side of the rotor.
7. The internals kit may be cleaned in a turbine oil, solvent, alcohol or trichlorethane to remove sticky residue.
8. Reinstall the spacer and flow straightener on the shaft and insert the internals into the flow meter housing.
9. Apply Threadlocking Adhesive #242 (blue) to the retaining nut and thread into housing.
10. Orient the flow sensor into the ships piping observing that the flow direction marking on the flow sensor body, matches the direction of fuel flow, reference Figure 6-2.

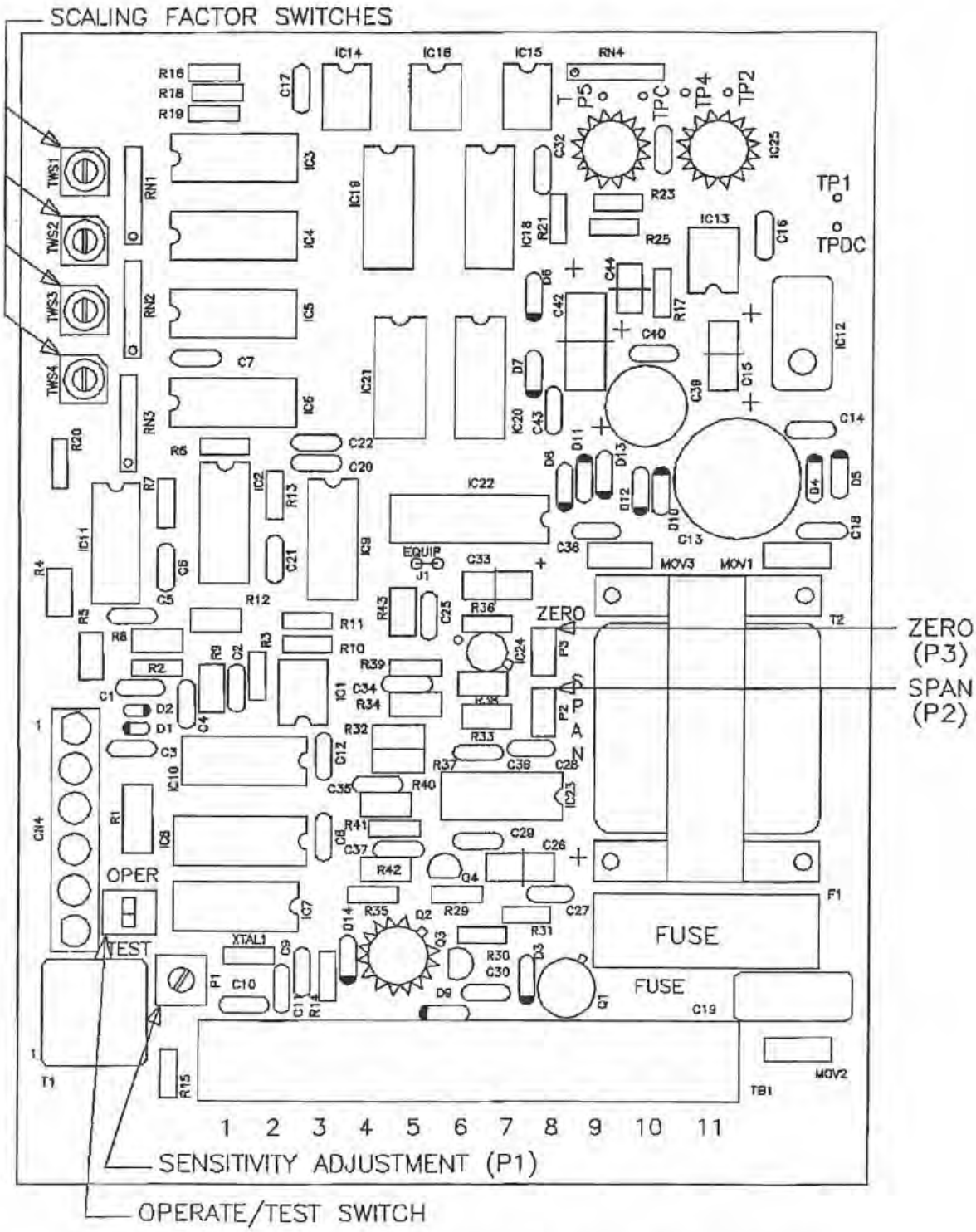

FIGURE 6–1 ELECTRONICS UNIT CONTROLS

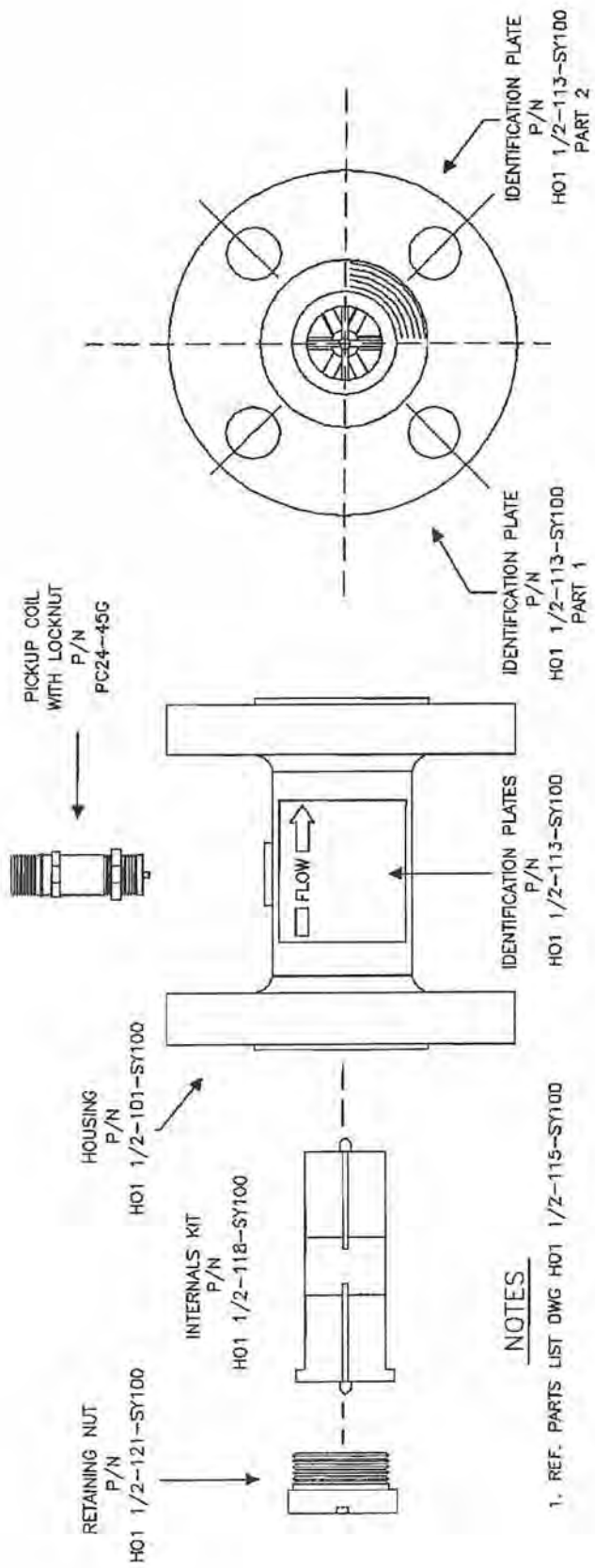

FIGURE 6-2 FLOW SENSOR DISASSEMBLY

CHAPTER 7

PARTS LIST

7-1 INTRODUCTION

This section provides a summary of the parts list for the SY-100 Naval Fuel Flowmeter System.

Provisioned parts recommended for the system are also presented. Parts location illustrations are shown on the assembly drawings. Suppliers for each part are listed.

7-2 LIST OF MAJOR COMPONENTS

Table 7-1 lists the major components of the SY-100 Naval Fuel Flowmeter System.

7-3 PARTS LISTS

Table 7-2 lists the component parts for the HO-l-l/2-SY-100 Flow Sensor. Table 7-3 lists the component parts for the 47-SY-100 Electronics Unit.

7-4 LIST OF ATTACHING HARDWARE

Table 7-4 lists the required attaching hardware required for installation of the major components. The required mating electrical connectors are supplied with each system.

7-5 LIST OF MANUFACTURERS

Table 7-5 lists the manufacturers of subassembly component parts utilized in the system and their identifying CAGE code numbers.

7-6 PARTS LOCATION ILLUSTRATION

Refer to figure 7-1 for the parts location for the HD-l-l/2-SY-100 Flow Sensor. Refer to figure 7-2 for the parts location for· the 47-SY-100 electronics unit.

Table 7-1

List of Major Components

Part Number	Component	Quantity
HO-1-1/2-SY-100	Flow Sensor	1
47-SY-100	Electronics Unit	1
MS3106F-10SL-4P	Pickup Coil Signal Connector	1
MS3I06F-10SL-3S	Input Mating Connector	1
MS3106F-14S-7P	Aux. Out Mating Connector	1
MS3106F-16-10S	Power In Mating Connector	1

Table 7-2

H0-1-1/2-SY-100 Component Parts List

Figure Number	Part or DRW Number	Description	Notes
7-1	KIT1-1/2-3-130-T-INTERNALS	Flowmeter Internals Kit w/ Label	1
7-1	PC-24-45G	Pickup Coil w/ Nut	1
7-1	HO-1-1/2-118- SY-100	Nut, Retaining	
7-1	HO-1-1/2-101- SY-100	Housing	

NOTES

1. PROVISIONED PART(S).

Table 7-3

47-SY-100 Component Parts List

Figure Number	Part or DRW Number	Description	Notes
7-2	PCA-131	Printed Circuit Assembly	1
7-2	PCA-130	Printed Circuit Assembly	1
7-2	GO-864-613	Counter, Resettable	1
7-2	GO-866-607	Counter, Non-Resettable	1
7-2	CA-47-1	Cable Assembly	1
7-2	CA-47-2	Ground Strap, Cover Door	1
7-2	47-900-NS	Enclosure, Prewired	1
7-2	GI-405-65	Cover Kit, Replacement	2
7-2	47-912	Cover Gasket	1

NOTES -

1. THESE ITEMS HAVE BEEN PROVISIONED.

Table 7-4

List of Attaching Hardware

Manufacturer and Part Number	Description	Quantity
	Flange Mounting Bolts	8
	Flange Mounting Washers	16
	Flange Mounting Nuts	8
	Enclosure Mounting Bolts	4
	Enclosure Mounting Lock Washers	8
	Enclosure Mounting Nuts	4
Alpha, PN 3247	Power Cable NSN 6145-00-520-9997	TBD
Alpha, PN 3241	Signal Cable NSN 6145-00-056-8184	TBD
Alpha, PN 3241	Auxiliary Output Cable	TBD
MS3l06F-10SL-4S	Flow pickup Coil Mating Connector	1
MS3l06F-10SL-3S Cannon	Flow Input Mating Connector	1
MS3l06F-14S-7P Cannon	Aux. Output Mating Connector	1
MS3l06F-16-l0S Cannon	Power Input Mating Connector	1

NOTES -

1. MATING CONNECTORS ARE SUPPLIED WITH EACH SYSTEM.
2. CABLE TYPES LISTED ABOVE WERE CHOSEN TO ACHIEVE THE DESIRED ELECTROMAGNETIC ATTENUATION. ARMORED CABLE TYPES OFFERING IMPROVED PHYSICAL PROTECTION WITH THE REQUIRED BRAIDED SHIELD MAY BE SUBSTITUTED.
3. ALTERNATE SOURCES FOR MIL-C-50l5 CONNECTORS MAY BE USED.

Table 7-5

List of Manufacturers

CAGE Code	Name and Address
33321	Hoffer Flow Controls, Inc. 107 Kitty Hawk Lane P.O. Box 2145 Elizabeth City, NC 27909
92194	Alpha Wire Corp. 711 Lidgerwood Avenue Elizabeth, **NJ** 07207
	ITT Cannon 666 East Dyer Road Santa Ana, CA 92702

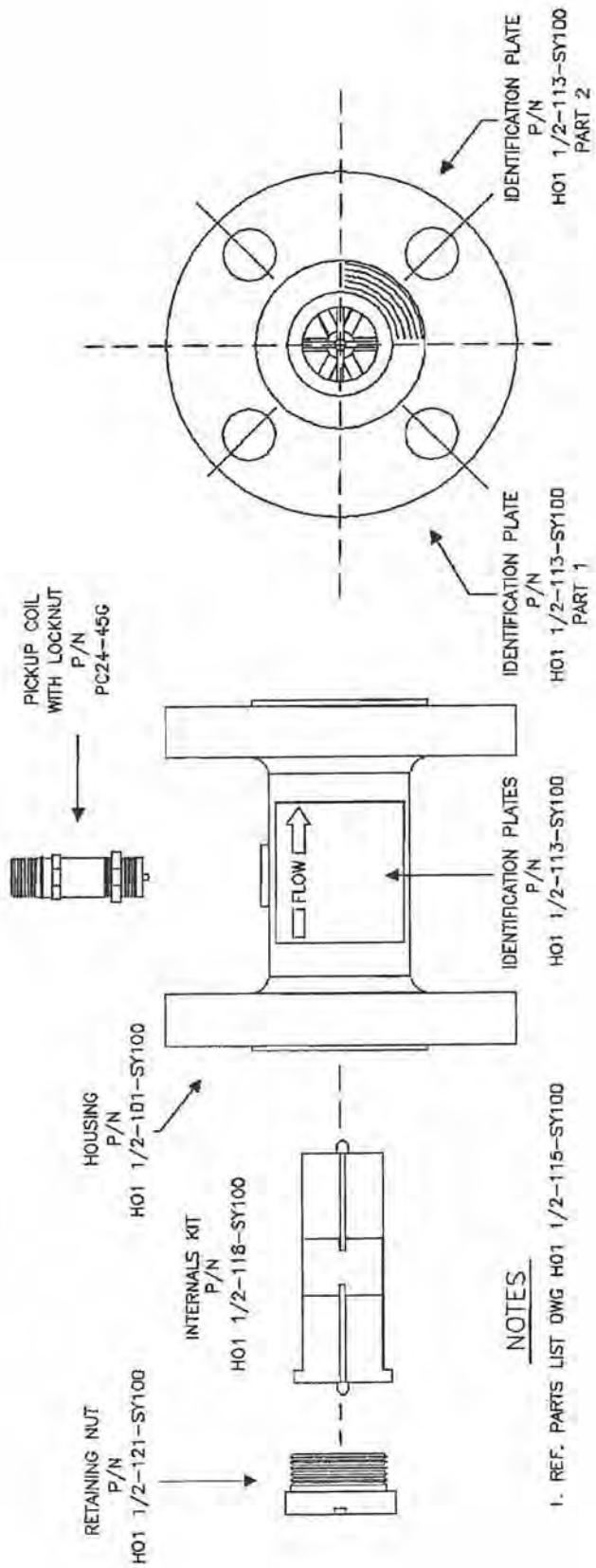

FIGURE 7-1 HO 1 1/2-SY100 FLOW SENSOR

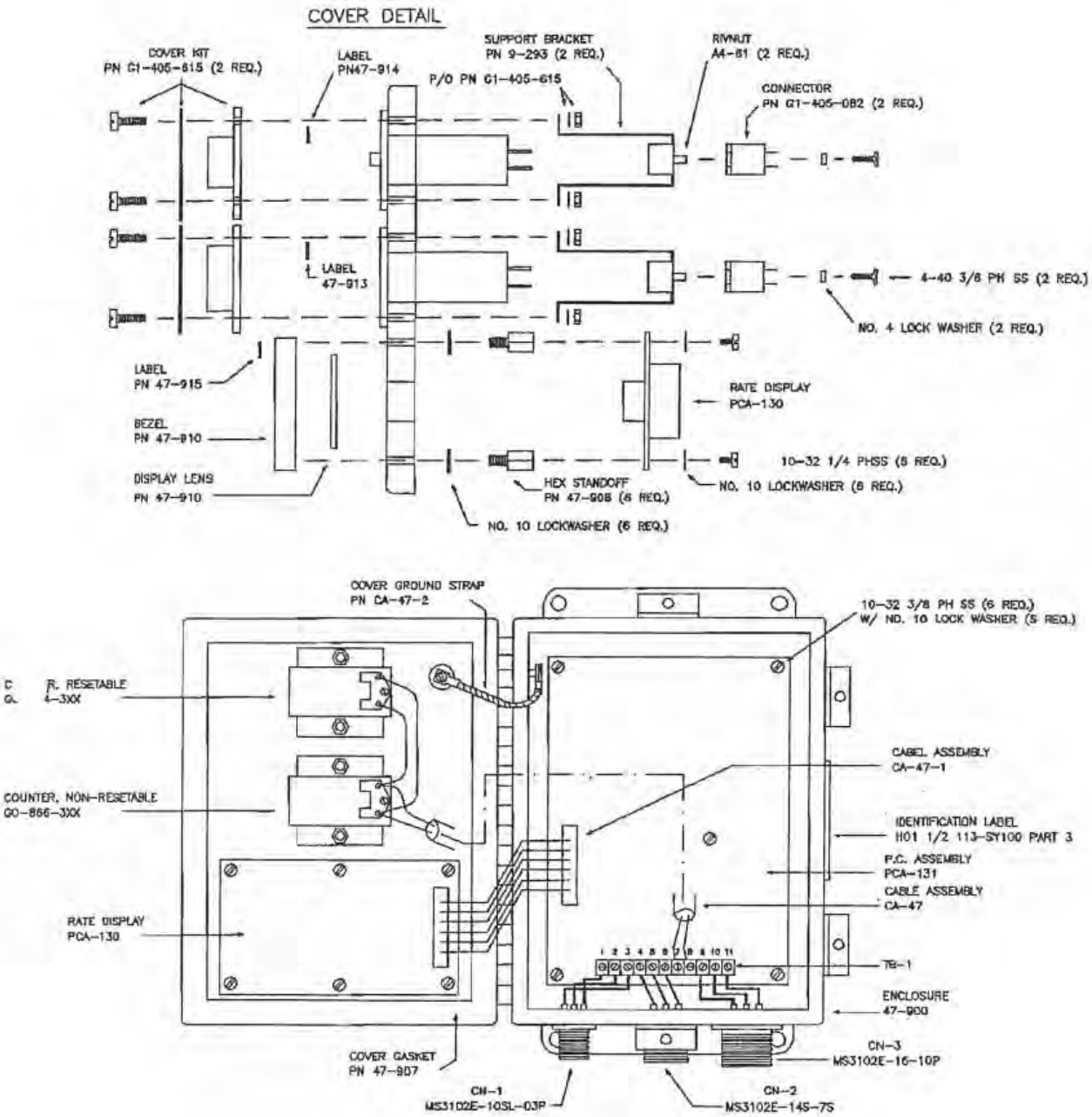

FIGURE 7-2 47-SY100 ELECTRONICS UNIT

THIS PAGE INTENTIONALLY LEFT BLANK

CHAPTER 8

INSTALLATION

8-1 INTRODUCTION

This chapter provides instructions for installing the SY-100 Naval Fuel Flowmeter System.

The SY-100 System is composed of the following parts:

1. Model HO-1-1/2-SY-100, Flow Sensor
2. Model 47-SY-100, Electronics Unit
3. Mating Connectors
4. User Supplied Signal and Power Electrical Cabling
5. Optional User Supplied Auxiliary Output Electrical Cabling.

Planning for the installation, site selection, unpacking, special tools, installation and installation checkout are described.

8-2 INSTALLATION DRAWINGS

Refer to figure 8-1 for the outline drawing of the HO-1-1/2-SY-100 Flow Sensor.

Refer to figure 8-2 for the physical outline dimensions and installation of the Model 47-SY-100 Electronics Unit.

Refer to figure 8-3 for the installation piping requirements.

Refer to figure 8-4 for the interconnecting electrical wiring diagram.

8-3 SITE SELECTION INFORMATION

The following provides a summary of the site selection criteria for successful installation and operation of the SY-100 Naval Fuel Flowmeter System. It presents the special criteria associated with each principle component and the user supplied interconnecting cabling.

8-3-1 FLOW SENSOR SITE SELECTION

NOTE

> A fuel flow strainer is assumed to be installed in the fuel system upstream of the flowmeter. The SY-100 Naval Fuel Flowmeter System is relying on this strainer to capture large foreign matter which could otherwise foul the turbine rotor.

The flow sensor shall be installed in the fuel flow line. A horizontal orientation is suggested but not required.

The site chosen for installation of the flow sensor shall maintain adequate access for maintenance and shall include provisions for safe drainage of fuel oil which is required during maintenance operations.

In addition, the location shall be chosen to maximize the distance from any nearby source or electrical interference. Such sources include motors, transformers, fans, pumps, electric valves, ignition controls and power wiring. The flow sensor shall be at least two feet away from any such source of interference.

The flow line upstream of the flowmeter shall be modified to provide at least 15 inches of 1-1/2" pipe. The mating connection on the piping shall consist of a 300 #, 1-1/2" diameter flange to MIL-STD-777.

The flow line downstream of the flowmeter shall be modified to provide at least 7 1/2 inches of 1-1/2" pipe. The mating connection on the piping shall consist of a 300 #, 1-1/2" diameter flange to MIL-STD-777.

A user supplied interconnecting cable will be required to run from the flow sensor to the electronics unit. The site shall provide for adequate support and mechanical protection to strain relieve this cable.

8-3-2 ELECTRONICS UNIT SITE SELECTION LOCATION

The electronics unit is intended for vertical surface mounting to a panel, bulk head or wall. The required minimum mounting surface area is approximately 10" wide by 16" high.

The vertical surface must provide adequate mechanical support, permit ease of viewing by the operator and allow free swing of the cover door when opened to provide for access for maintenance and/or repairs.

Adequate ambient lighting will be required to illuminate the totalizer displays, internal controls and adjustments and enclosure markings.

Adequate space must be provided below the enclosure for the lead in the electrical cables and connectors. It is recommended that provisions be made to support and strain relieve the electrical cabling within one foot of the electric enclosure.

The ships power line for this system shall be ungrounded, single phase, 115 V AC 60 Hz, Type 1 power source and meet the interface constraints of section 300 of DOD-STD-1399.

A user supplied interconnecting cable will be required to run .from the flow sensor to the electronics unit. The site shall provide for adequate support and mechanical protection to strain relieve this cable.

A user supplied interconnecting power cable will be required to run from the available ships power 115 V AC, 60 Hz to the electronics unit. The site shall provide for adequate support and mechanical protection to strain relieve this cable.

8-3-3 AUXILIARY OUTPUT (Optional)

A user supplied interconnecting cable is required to run from the auxiliary output of the electronics unit to a remote data acquisition system. The site shall provide for adequate support and mechanical protection to strain relieve this cable.

8-4 UNPACKING AND REPACKING

CAUTION

> When unpacking or repacking the flow sensor assembly care must be taken to see that no foreign matter is permitted to enter the flowmeter housing. If repacking is required protect flange with protective material. Cardboard will suffice for this purpose. Place protective covers over electrical connectors and pack into strong carton with shock absorbing material 2 inches deep on all surfaces.

Remove flow sensor from carton. Remove end covers from flanges. Remove protective covers from MS connectors only after the system is mounted in its final location.

Each electronics unit has been calibrated for use with the flow sensor which accompanies it prior to shipment. These items form a calibrated pair and should be kept as a matched, companion set of equipment.

The mating electrical connectors have been supplied with each system, as well as, calibration records. Locate these records in the shipping container and keep them with the equipment for reference until installation has been completed.

The cover of the electronics enclosure should not be opened prior to installation to prevent the possibility of accidental electrostatic damage to the sensitive electrical components.

8-5 FLOW SENSOR INSTALLATION

CAUTION

Do not allow fuel spills when installing the flow sensor. Drain the fuel line prior to starting any work. Observe all safe practices during performance of the installation.

Do not use the flow sensor body as a “Spool Piece” during welding operations during installation of the SY-100 Naval Fuel Flowmeter System.

NOTES

Planning for the installation for the flow sensor is described under the section for site selection ships company or other activity shall provide all the materials required to modify the existing ships piping.

Suitable fasteners for the flange ratings shall be obtained from ships stores in advance of starting the work. Suitable gaskets (two required) are required to match the bolt pattern and meter inlet bore.

Prepare the ships piping for installation of the flow sensor as shown in figure 8-3. Provide adequate support for this new piping to restrict travel during high shock conditions. Maintain adequate access for maintenance.

The mating flange and piping segments shall be free of weld protrusions into the piping. such obstructions may create turbulence and result in flow measurement errors.

The ships fuel piping shall be free of all loose, foreign material and welding slag.

Orient the flow sensor into the ships p1p1ng observing that the flow direction marking on the flow sensor body matches the direction of fuel flow in the installation.

Position gaskets and align the flange bolts in such a position that the pickup coil shall be oriented to permit ease of assembly of the interconnecting cabling and is clear of obstructions.

Place nuts on all flange bolts and tighten securely. Place the prepared interconnecting cable (CN-4) on the pickup coil and tighten.

8-6 ELECTRONICS UNIT INSTALLATION

CAUTION

Electrical safe practices must be observed during preparation and installation of the power cabling to the electronics unit to minimize the risk of electrical shock.

Planning for the installation of the electronics unit is described in 8-3-2. Ships company or other activity shall provide all the materials required to modify the intended mounting location.

Suitable fasteners for mounting the electronics unit must be obtained from ships stores in advance of starting the work. Refer to Table 7-4 for fastener type and quantity.

Position the enclosure on the intended surface to provide adequate access for maintenance, cable entries and swing for the cover door. Prepare the mounting surface for installation of the electronics unit by marking and drilling the mounting holes required. The surface must provide adequate support to restrict travel during high shock conditions.

Use of lock washers which provide additional electrical grounding between the enclosure and the mating surface is recommended. This will enhance electrical safety and electromagnetic compatibility.

Mount the electronics unit to the mounting surface using the recommended fasteners. Tighten all fasteners.

Prepare the mounting holes for the strain reliefs for the interconnecting signal, auxiliary output and power cables.

8-6-1 INSTALLATION OF THE INTERCONNECTING AND POWER CABLES

NOTE

The quality of workmanship required in preparing the interconnecting and power cabling must be of the highest order.

A suitable shielded cable type is required for proper operation of the SY-100 Naval Fuel Flowmeter System. Refer to Table 8-1 for recommended cable types. Alternate source items of similar construction are permitted.

CAUTION The electrical power cabling shall be disconnected while making electrical connections to reduce the risk of electrical shock.

Install the interconnecting signal cable between the flow sensor and the electronics unit. The cable routing will minimize parallel runs with electrical power cabling and maximize mechanical protection. The cable shall be adequately supported over the entire cable run. Suitable chaffing insulators shall be used where appropriate.

Install the power cable between the electronics unit and a convenient source for the specified ships power. The cable routing will provide adequate mechanical protection for the cable. The cable shall be adequately supported over the entire cable run. Suitable chaffing insulators shall be used where appropriate.

The mating connectors have been supplied with the SY-100 Naval Fuel Flowmeter System. The required electrical connectors from the electronics unit to the flow sensor and ships power are shown in the interconnecting Wiring drawing in figure 8-4.

NOTE

> The braided shield for the interconnecting wiring cable between the flow sensor and the electronics unit shall be terminated to ground on the electronic unit side of the cable only.

Prepare the cable ends to accept the mating electrical connector. Place a small length of heat shrink tubing over the wires ends. Solder the wires to the mating connector observing proper terminations and color coding, as shown in Figure 8-4. Shrink the tubing around the wires to minimize the risk of short circuits after assembly. Assemble the connector hood and clamp to assure a water tight connection.

Pretest the cabling for proper terminations and short circuits prior to connection to the electronics unit.

Connect the completed cabling to the electronics unit securely. Support the two cables using suitable strain reliefs.

8-6-2 INSTALLATION OF THE AUXILIARY OUTPUT

The auxiliary output is an optional feature of the SY-100 Naval Fuel Flowmeter System which may be used on some installations. The following description applies to such installations.

CAUTION

> The electrical power cabling to the SY-100 Naval Fuel Flowmeter System and the Remote Data Acquisition System must be disconnected while making electrical connections to reduce the risk of electrical shock.

Install the auxiliary output cable between the electronics unit and the remote data acquisition system. The cable routing shall minimize parallel runs with electrical power cabling and which will maximize mechanical protection. The cable shall be adequately supported over the entire cable run. Suitable chaffing insulators shall be used where appropriate.

The mating connector (CN-2) has been supplied with the SY-100 Naval Fuel Flowmeter System. The recommended cable type for the auxiliary output is listed in Table 8-1.

The required electrical connections to the auxiliary output connector are shown on the interconnecting wiring drawing in Figure 8-4.

NOTE

> The braided shield for the auxiliary output cable shall be terminated to ground on both ends of the cable to assure electromagnetic compatibility.

Prepare the cable ends to accept the mating electrical connector. Place a small length of heat shrink tubing over the wires ends. Solder the wires to the mating connector observing proper terminations and color coding, as indicated in Figure 8-4. Shrink the tubing around the wires to minimize the risk of short circuits after assembly. Assemble the connector hood and clamp to assure a water tight connection.

Pretest the cabling for proper terminations and short circuits prior to connection to the electronics unit.

Connect the auxiliary output cabling to the electronics unit securely. Support the cable using proper strain reliefs.

8-7 INSTALLATION CHECKOUT

CAUTION

Fuel leaks may occur if gasketing is improper or flange bolts are not secure. Check bolt tightness prior to pressurizing the fuel line. Check the workmanship on all modifications to the ships piping made in the course of flowmeter installation prior to pressurizing the fuel line.

It is recommended that the fuel lines be cleaned of any debris prior to installing the flowmeter. Large debris may result in a "Stalled Turbine Rotor", which may cause damage to the "Turbine Rotor" resulting in loss of calibration for the flow sensor.

8-7-1 VISUAL EXAMINATION

Verify that the flowsensor and the electronics unit have been properly paired according to calibration records provided with each system. Verify the flowmeter has been installed with the flowmeter housing orientation and flow arrow marking in the direction of fuel flow.

Verify the cabling has been suitably prepared and strain relieved prior to energizing unit.

8-7-2 ELECTRONICS UNIT SENSITIVITY ADJUSTMENT.

NOTE

The flow sensor uses a pickup coil device to generate an electrical signal proportional to the liquid flow. This device may also pickup a false signal produced by other electrical equipment in the immediate area.

The flow sensor has been located in an installation site which seeks to minimize false pickup from such nearby electrical equipment. After installation, there still may be some false sign pl pickup during periods of no flow which will result in false fuel flow indications until the following adjustment is performed.

The electronics unit has a user adjustable noise threshold control. This adjustment is to be set during installation checkout to a position where there is no false flow indication during times of no fuel flow. Perform the following procedure.

Observe the SY-100 Naval Fuel Flowmeter System during a period of no fuel flow with all adjacent electrical equipment activated.

False pickup may be assumed if there is:

1. False Flow Totalization
2. False Flowrate Indication

If there is a false flow indication perform the following adjustment. If there is no false flow indication go to the instructions of paragraph 8-7-3.

CAUTION

The electronics enclosure is powered by 115 V AC 60 Hz power, therefore, caution should be exercised when the cover door is opened. The SY-100 Naval Fuel Flowmeter System must be energized while making the following adjustment. The work should be done by a qualified electrical technician familiar with electrical safety practice.

Open the cover door for the electronics unit. Locate the sensitivity adjustment control PI on the PCA-131 printed circuit assembly, see Figure 8-5.

Using a nonmetallic adjustment screwdriver, slowly turn sensitivity adjust (PI) counterclockwise until the false indication stops.

Close the cover door of the electronics unit and secure it in place.

8-7-3 ELECTRONIC UNIT SIMULATED OPERATIONAL CHECKOUT

The electronics unit has a user selectable test mode in which the internal test oscillator simulates the flow sensor input for the purposes of initial checkout, periodic adjustment and trouble shooting.

This feature will be used during the installation checkout.

Open the cover door for the electronics unit. Locate the OPERATE/TEST control. Place the switch in the test position. Proper operation of the electronics unit may be assumed when:

The resettable totalizer advance by one count approximately every 2 seconds.

1. The non-resettable totalizer advance by one count approximately every 2 seconds.
2. The gallons per hour indicator displays flowrate of approximately 1966 GPH after 1 and 1/2 minutes.
3. The auxiliary output delivers a current of approximately 12.74 mA after 1 and 1/2 minutes.
4. Depressing the reset button on the resettable totalizer clears the total to 000000 gallons.

When the testing is complete return the OPERATE/TEST switch to the TEST position.

8-7-4 SYSTEM OPERATION VERIFICATION

Observe the operation of the SY-100 Naval Fuel Flowmeter System while in actual service as a final installation verification test. The GPH indicator and resettable gallons should operate when fuel flow is present.

Upon completion of the installation checkout, the calibration documents which accompany each system shall be maintained in the designated document storage area.

The SY-100 Naval Fuel Flowmeter System is now ready for use.

Table 8-1

List of Recommended Cable

Manufacturer, P/N	NSN Number	Description
Alpha, P/N 3247	6145-00-520-9997	Power Cable
Alpha, P/N 3241	6145-00-056-8185	Signal Cable
Alpha, P/N 3241	6145-00-056-8185	Auxiliary Output Cable

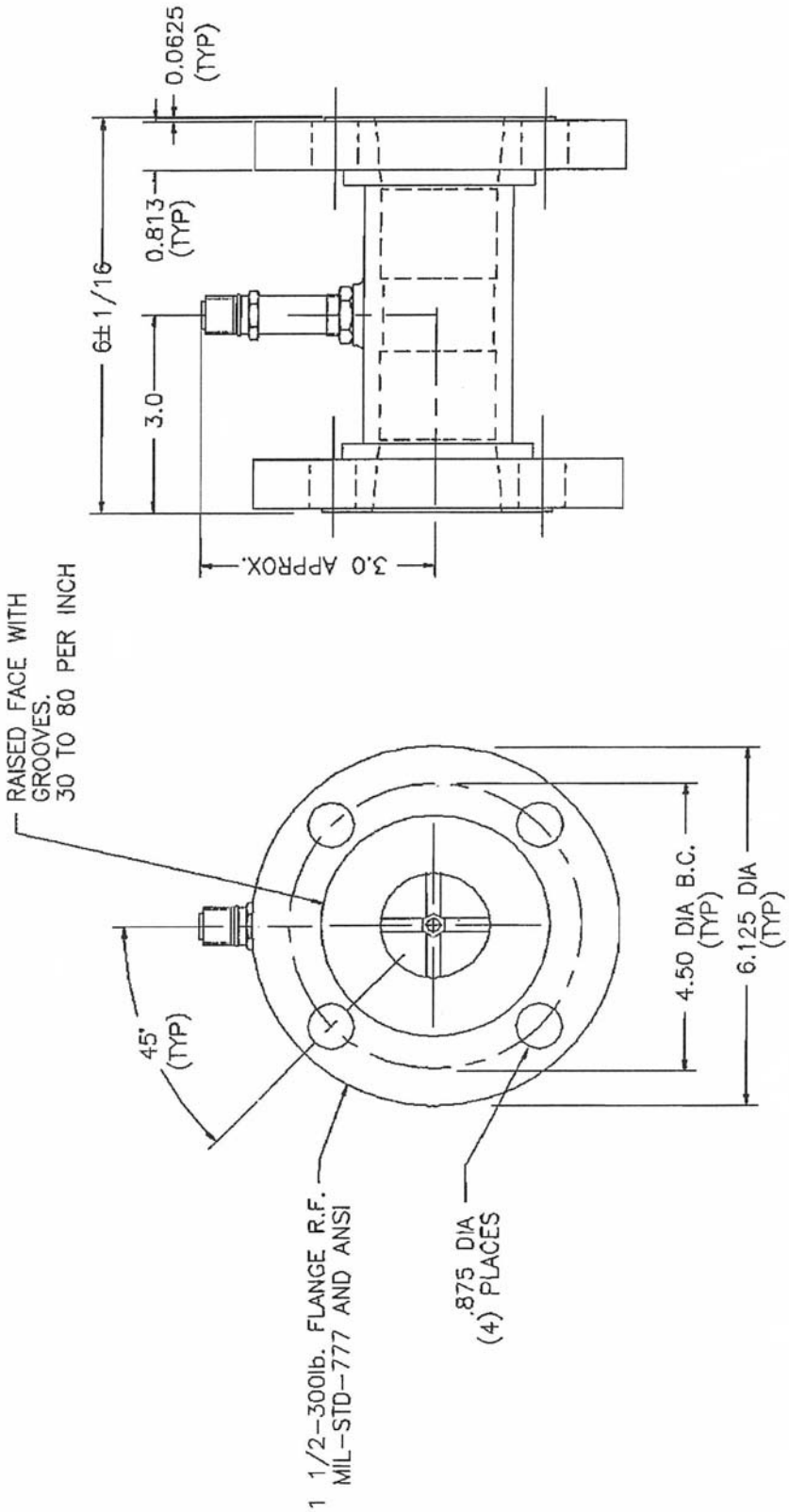

FIGURE 8-1 HO 1 1/2-SY100 OUTLINE DIMENSIONS

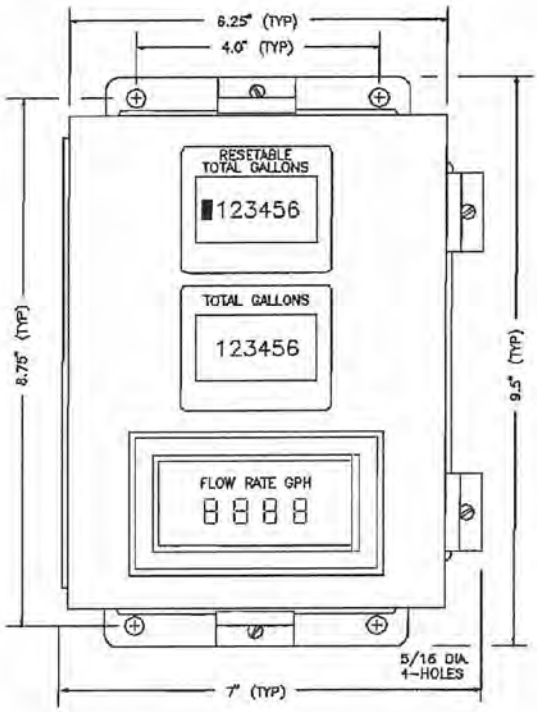

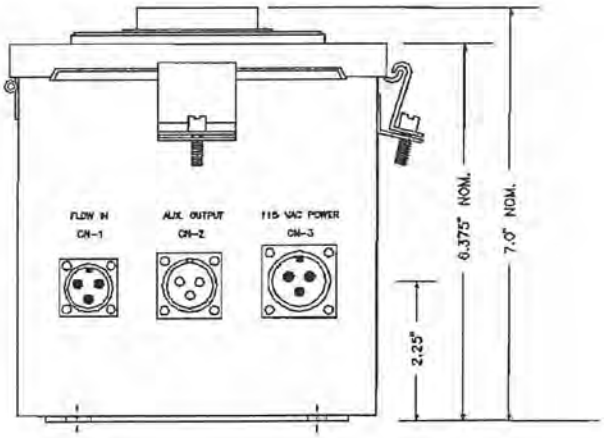

FIGURE 8–2 47–SY100 OUTLINE DIMENSIONS

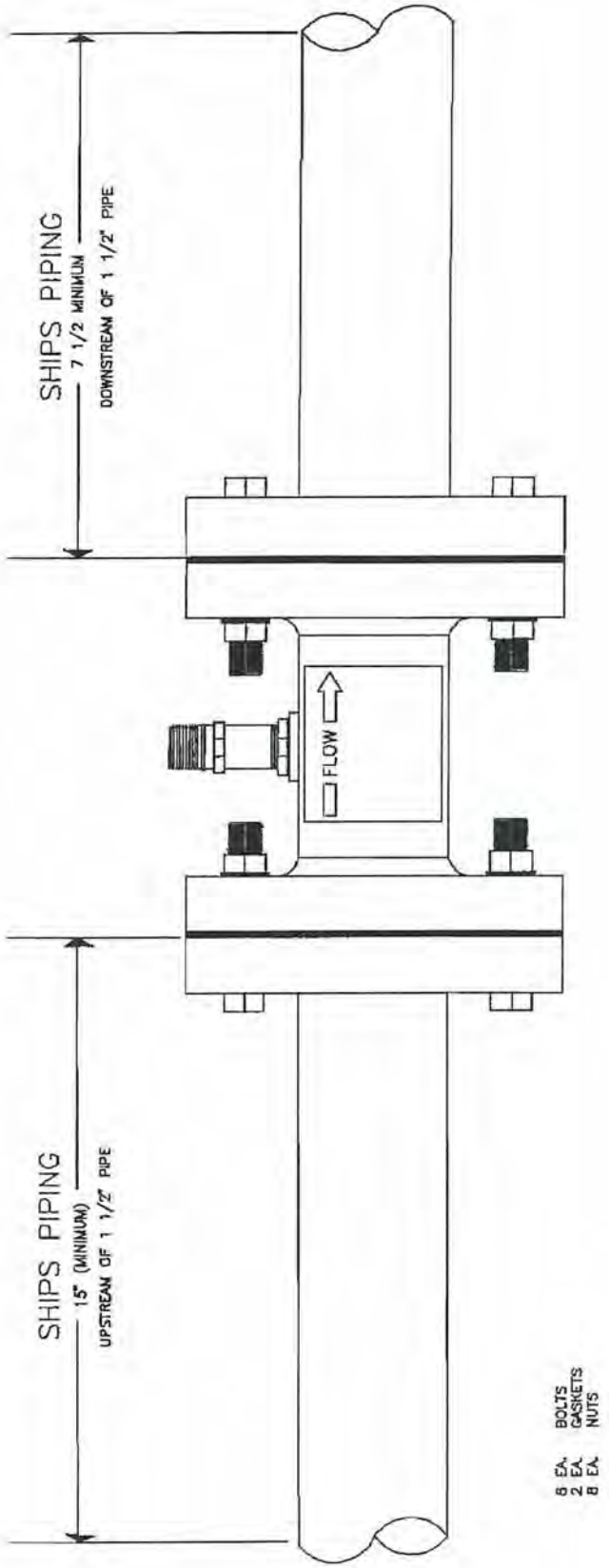

FIGURE 8-3 HO 1 1/2-SY100 INSTALLATION

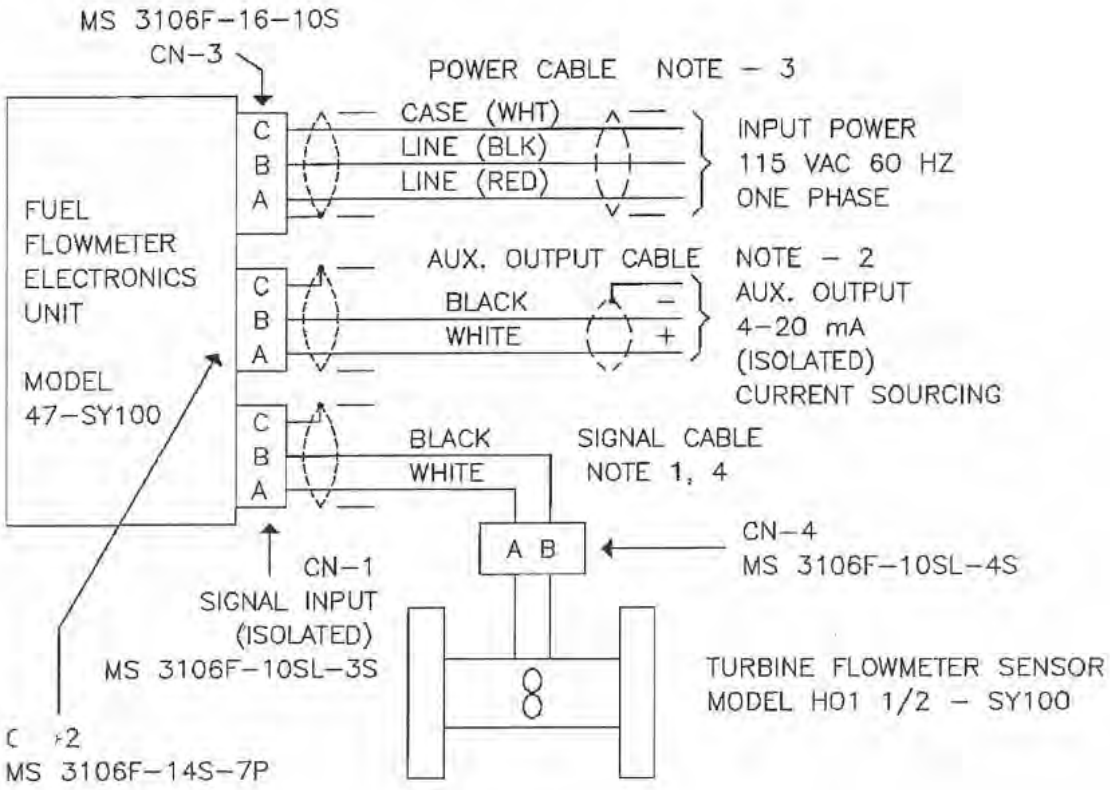

NOTES

1. SIGNAL CABLE (USER SUPPLIED) SHALL BE MIL-W-16878, 18 AWG BRAIDED SHIELDED TWISTED PAIR SUITABLE FOR MIL-STD-461.
2. AUX. OUTPUT CABLE (USER SUPPLIED) SHALL BE MIL-W-16878 18 AWG BRAIDED SHIELDED TWISTED PAIR, SUITABLE FOR MIL-STD-461 (GROUND SHIELD BOTH ENDS).
3. POWER CABLE (USER SUPPLIED) SHALL BE MIL-W-16878 14 AWG 3 WIRE, BRAIDED SHIELDED TWISTED.
4. SHIELDS SHALL BE GROUNDED AT ONE END ONLY, PREFERABLY AT THE ELECTRONICS UNIT.
5. POWER SHALL BE 115 VAC 60 HZ TYPE-1, UNGROUNDED, SINGLE PHASE.
6. AUX. OUTPUT RATING, TYPE - CURRENT SOURCING ISOLATED 4-20 mA OUTPUT, MAXIMUM LOAD RESISTANCE 500 OHMS.

FIGURE 8-4 INTERCONNECTING ELECTRICAL WIRING

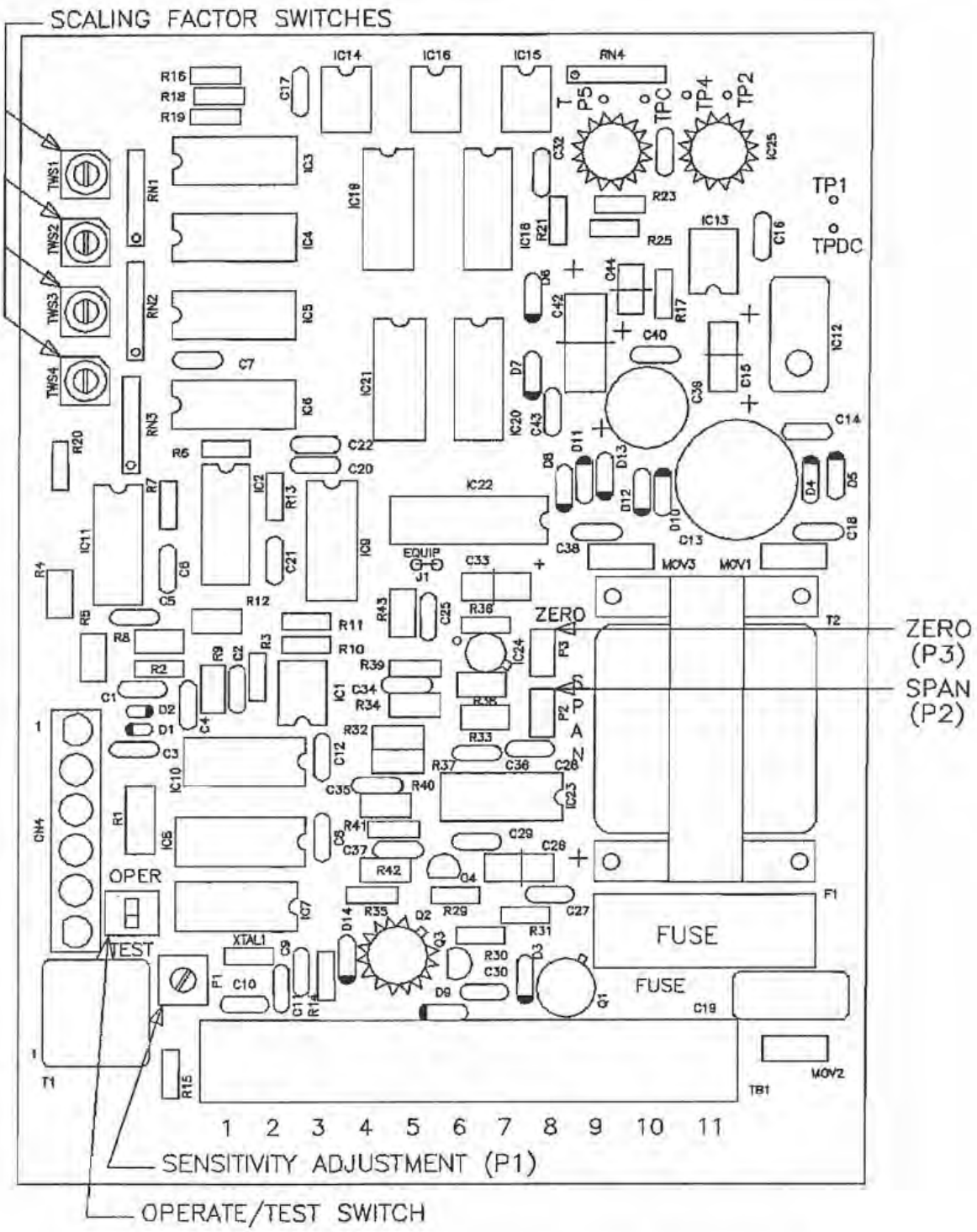

FIGURE 8-5 ELECTRONICS UNIT CONTROLS